
CATERLUX
Live an illuminated life

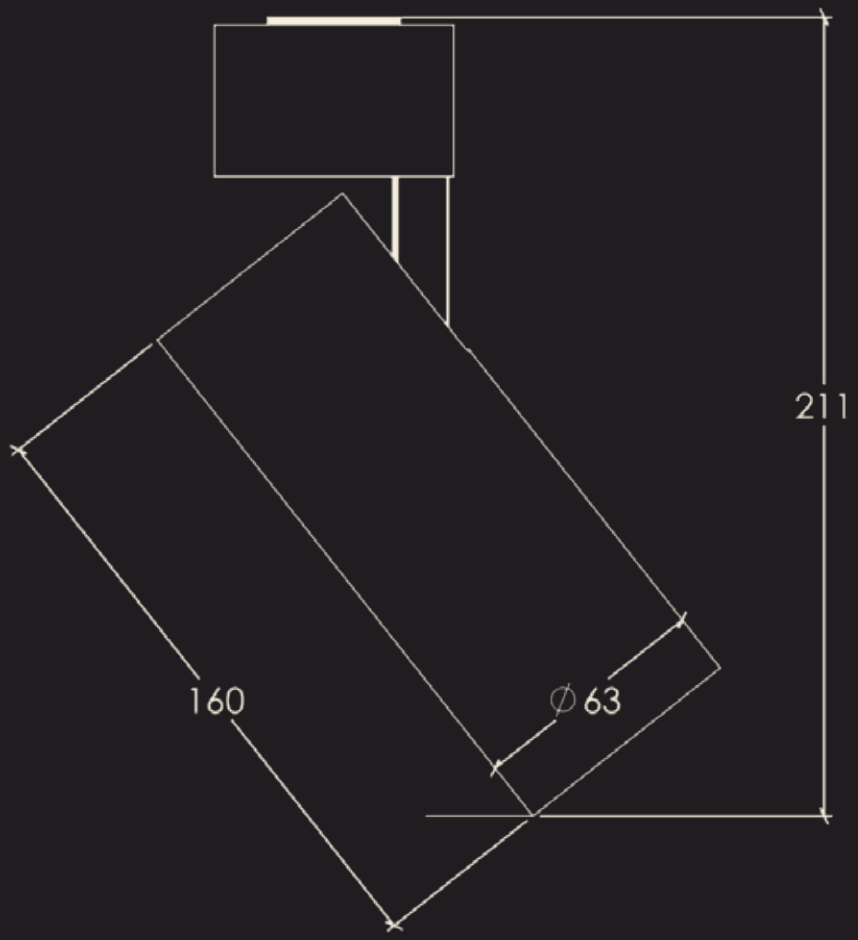



Mounting Dimensions



CATERLUX
Live an Illuminated life

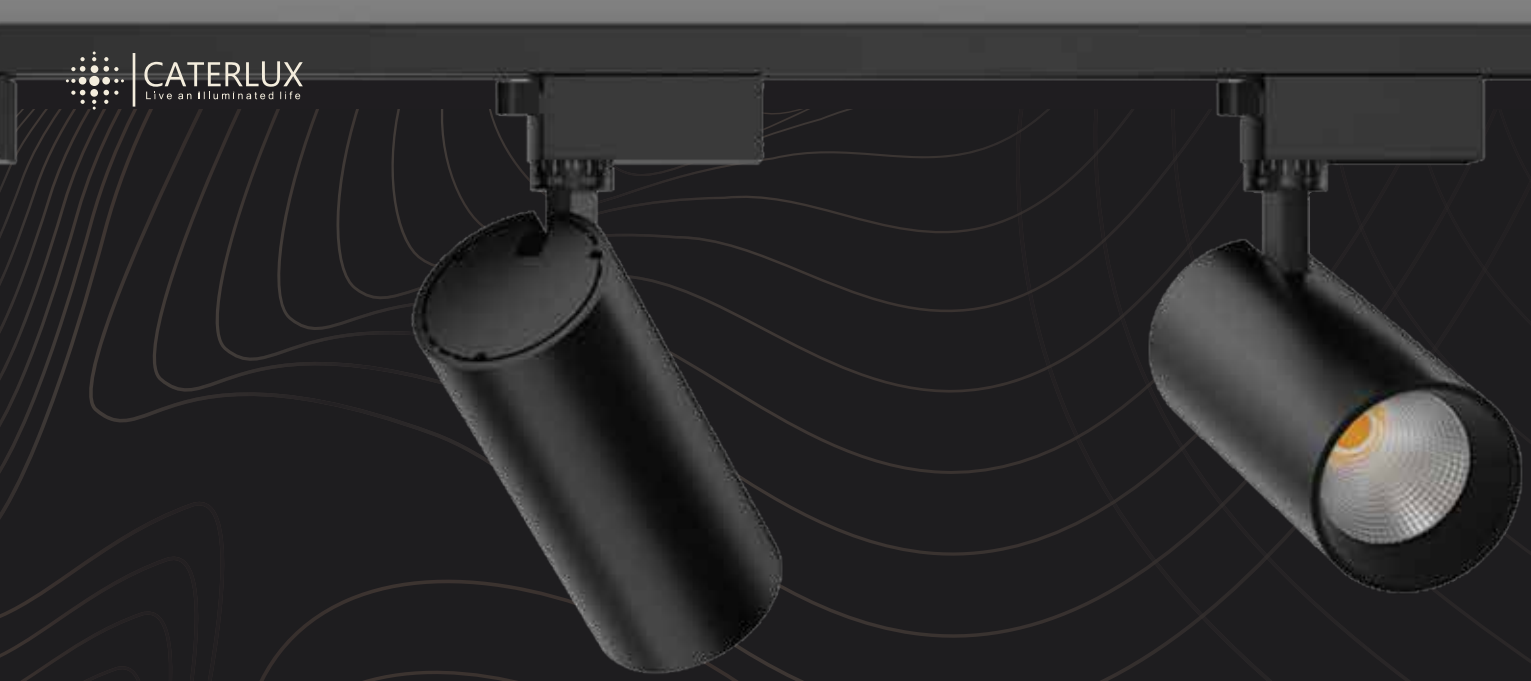

ABOUT US

Caterlux, an architectural lighting brand widely known for its mighty presence which firmly believes in the philosophy of Make in India. Over the years we have built trust amongst our innumerable clients all over India and luxuriate in an enviable market, dominant across a wide spectrum of products which is inclusive of smart, domestic, and automation.





CONTENT

01.	BESIL	01
02.	TROY	03
03.	ARRAY	04
04.	OPTIC	08
05.	LEAF	21
06.	BINGO	22
07.	OLIVIA	23
08.	MAGNA	24
09.	FUSION PRO	25
10.	BLISS	27
11.	TRITON	30
12.	TRACE	35
13.	PATTERN	36
14.	IVY	37
15.	MEGA	41
16.	TRIAD	42
17.	BENZ	43
18.	GRACE	45
19.	SHARP	49
20.	EXTRO	52
21.	SHARP DECO	53
22.	BLADE	55
23.	BULLET	59
24.	LINEA	67
25.	TUBE	70
26.	AQUA	72
27.	MIST	73
28.	DISK	74
29.	ATOM	75
30.	FOCUS - SHELL - OSLO	76
31.	TORCH	78
32.	DEW	80
33.	PENCIL	81
34.	DROP	82
35.	MINT	83
36.	CARAT	84
37.	EYE	85
38.	AURA	86
39.	STEP	88
40.	RING	89
41.	OVAL	90
42.	ORBIT	91
43.	BOLT	92
44.	PISTON	93
45.	RIBBON	94
46.	WALL WASHER	96
47.	FLEXIBLE WALL WASHER	97
48.	WALL GRAZER	98
49.	BELT	99
50.	CURTAIN GRAZER	100

CATERLUX
Live an Illuminated life

WWW.CATERLUX.IN

Besil 6W



ANTI-GLARE

DIMMABLE

TUNEABLE

BESIL 6W

CODE	SIZE	CUT OUT	BEAM ANGLE	IP CODE	CCT	BODY COLOUR	REFLECTOR COLOUR
CTR-A6-001	60×40MM	55MM	34°	IP20	3K/4K/6K	BLACK	MATT BLACK
CTR-A6-002	60×40MM	55MM	34°	IP20	3K/4K/6K	WHITE	PEARL BLACK
CTR-A6-003	60×40MM	55MM	34°	IP20	3K/4K/6K	BLACK	MATT BLACK
CTR-A6-004	60×40MM	55MM	34°	IP20	3K/4K/6K	WHITE	PEARL BLACK

Besil 12W



ANTI-GLARE

DIMMABLE

TUNEABLE

BESIL 12W

CODE	SIZE	CUT OUT	BEAM ANGLE	IP CODE	CCT	BODY COLOUR	REFLECTOR COLOUR
CTR-A12-001	86×52MM	75MM	34°	IP20	3K/4K/6K	BLACK	MATT BLACK
CTR-A12-002	86×52MM	75MM	34°	IP20	3K/4K/6K	WHITE	PEARL BLACK
CTR-A12-003	86×52MM	75MM	34°	IP20	3K/4K/6K	BLACK	MATT BLACK
CTR-A12-004	86×52MM	75MM	34°	IP20	3K/4K/6K	WHITE	PEARL BLACK

TROY 6,10,15W

CODE	POWER	SIZE	CUT OUT	BEAM ANGLE	IP CODE	CCT	BODY COLOUR	REFLECTOR COLOUR
CTR-G6	6WATT	60×60MM	50MM	34°	IP20	3K/4K/6K	WHITE	GLOSSY BLACK
CTR-G10	10WATT	70×65MM	60MM	34°	IP20	3K/4K/6K	WHITE	GLOSSY BLACK
CTR-G15	15WATT	80×70MM	70MM	34°	IP20	3K/4K/6K	WHITE	GLOSSY BLACK

Troy 6,10,15W







ARRAY 10W

CODE	SIZE	CUT OUT	BEAM ANGLE	IP CODE	CCT	BODY COLOUR	REFLECTOR COLOUR
CTR-R10-001-FX	70x68MM	60MM	34°	IP20	3K/4K/6K	BLACK	MATT BLACK
CTR-R10-002-FX	70x68MM	60MM	34°	IP20	3K/4K/6K	WHITE	MATT BLACK
CTR-R10-003-FX	70x68MM	60MM	34°	IP20	3K/4K/6K	BLACK	PEARL BLACK
CTR-R10-004-FX	70x68MM	60MM	34°	IP20	3K/4K/6K	WHITE	PEARL BLACK



Array 15W

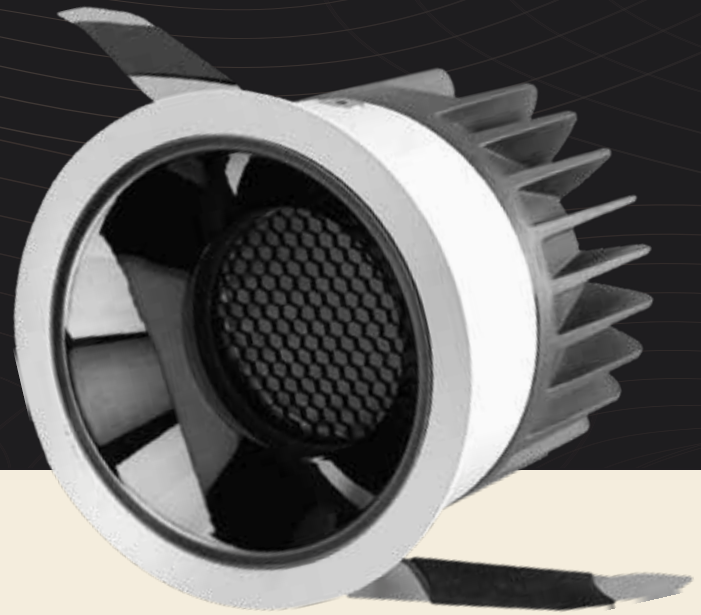

ANTI-GLARE

DIMMABLE

TUNEABLE

ARRAY 15W

CODE	SIZE	CUT OUT	BEAM ANGLE	IP CODE	CCT	BODY COLOUR	REFLECTOR COLOUR
CTR-R15-001-FX	90x82MM	75MM	34°	IP20	3K/4K/6K	BLACK	MATT BLACK
CTR-R15-002-FX	90x82MM	75MM	34°	IP20	3K/4K/6K	WHITE	MATT BLACK
CTR-R15-003-FX	90x82MM	75MM	34°	IP20	3K/4K/6K	BLACK	PEARL BLACK
CTR-R15-004-FX	90x82MM	75MM	34°	IP20	3K/4K/6K	WHITE	PEARL BLACK

ARRAY (AD) 10W

CODE	SIZE	CUT OUT	BEAM ANGLE	IP CODE	CCT	BODY COLOUR	REFLECTOR COLOUR
CTR-R10-001-AD	70x68MM	60MM	34°	IP20	3K/4K/6K	BLACK	MATT BLACK
CTR-R10-002-AD	70x68MM	60MM	34°	IP20	3K/4K/6K	WHITE	MATT BLACK
CTR-R10-003-AD	70x68MM	60MM	34°	IP20	3K/4K/6K	BLACK	PEARL BLACK
CTR-R10-004-AD	70x68MM	60MM	34°	IP20	3K/4K/6K	WHITE	PEARL BLACK

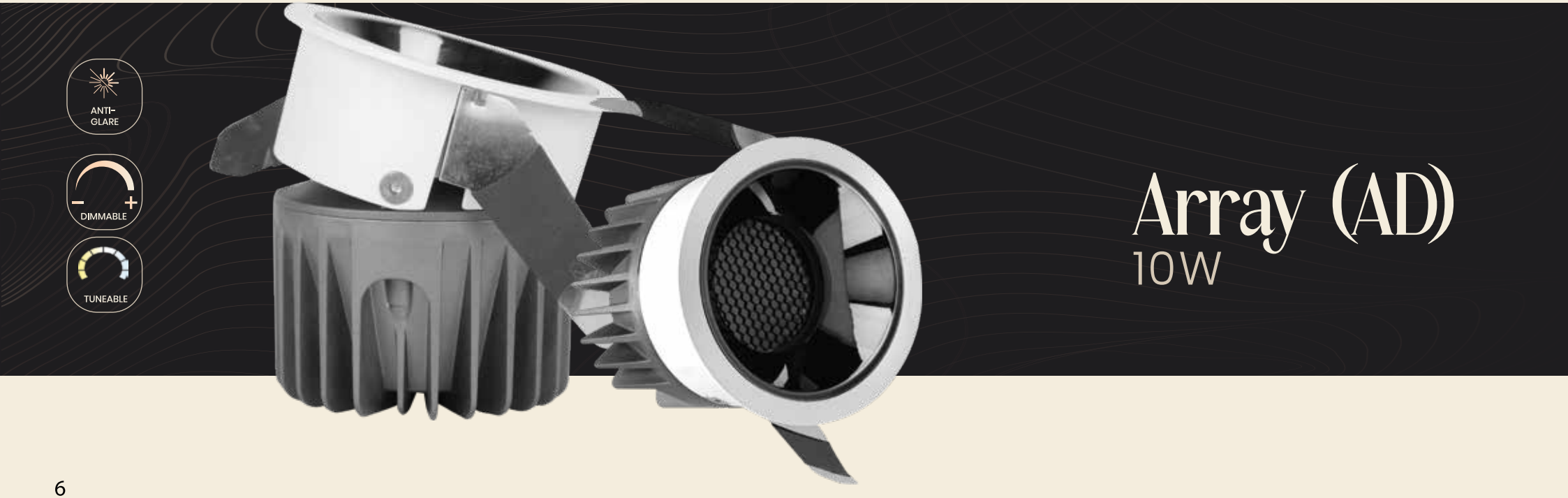

Array (AD)
15W



ANTI-GLARE

DIMMABLE

TUNEABLE

ARRAY (AD) 15W

CODE	SIZE	CUT OUT	BEAM ANGLE	IP CODE	CCT	BODY COLOUR	REFLECTOR COLOUR
CTR-R15-001-AD	90x82MM	75MM	34°	IP20	3K/4K/6K	BLACK	MATT BLACK
CTR-R15-002-AD	90x82MM	75MM	34°	IP20	3K/4K/6K	WHITE	MATT BLACK
CTR-R15-003-AD	90x82MM	75MM	34°	IP20	3K/4K/6K	BLACK	PEARL BLACK
CTR-R15-004-AD	90x82MM	75MM	34°	IP20	3K/4K/6K	WHITE	PEARL BLACK

CATERLUX
Live an illuminated life

WWW.CATERLUX.IN

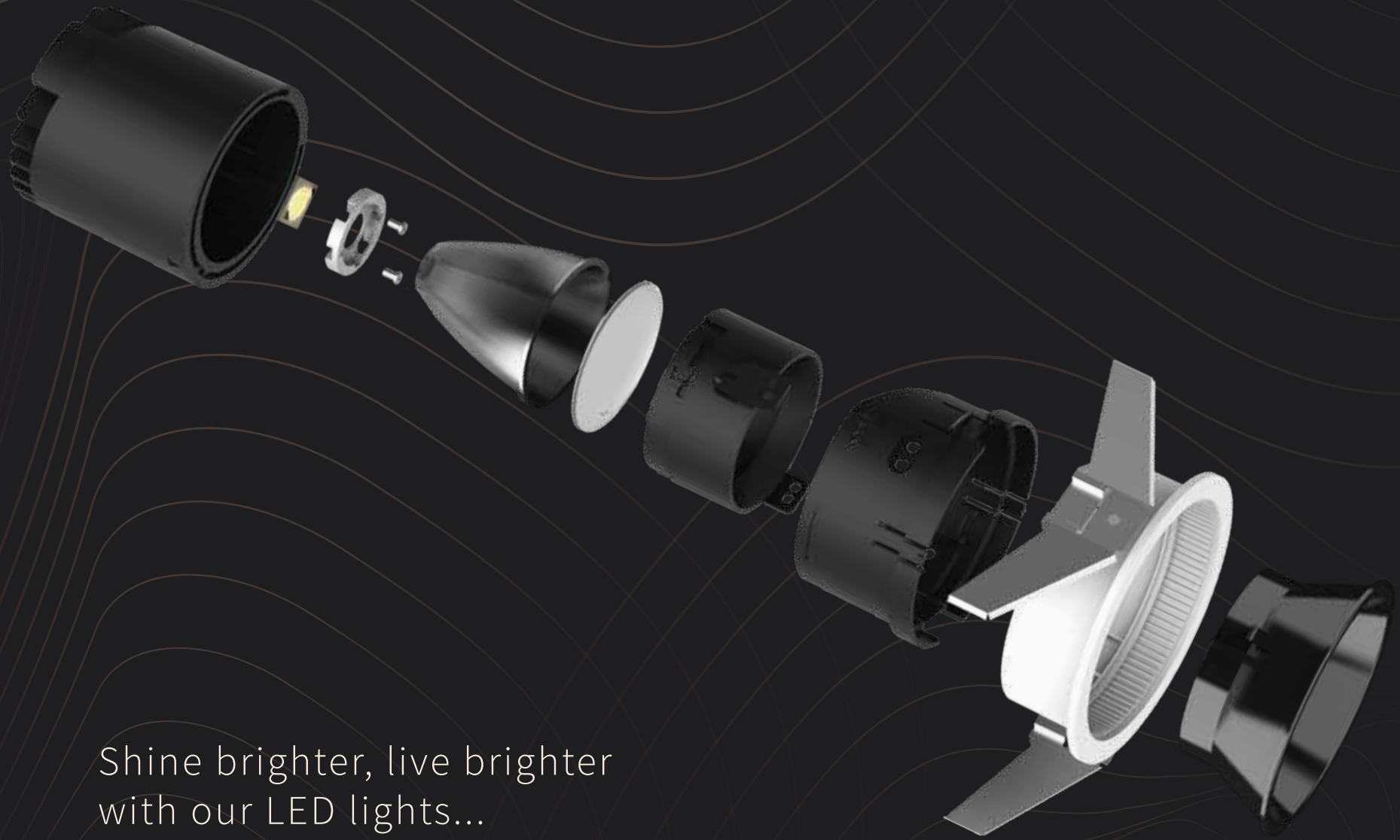

Shine brighter, live brighter
with our LED lights...



Optic Trimless 8W



ANTI-GLARE

DIMMABLE

TUNEABLE

OPTIC TRIMLESS 8W

CODE	SIZE	CUT OUT	BEAM ANGLE	IP CODE	CCT	BODY COLOUR	REFLECTOR COLOUR
CTR-WT8-001	59x75MM	50MM	36°	IP20	3K/4K/6K	BLACK/WHITE	PEARL BLACK
CTR-WT8-002	59x75MM	50MM	36°	IP20	3K/4K/6K	BLACK/WHITE	MATT BLACK
CTR-WT8-003	59x75MM	50MM	36°	IP20	3K/4K/6K	BLACK/WHITE	GOLD
CTR-WT8-004	59x75MM	50MM	36°	IP20	3K/4K/6K	BLACK/WHITE	WHITE
CTR-WT8-005	59x75MM	50MM	36°	IP20	3K/4K/6K	BLACK/WHITE	CHROME
CTR-WT8-006	59x75MM	50MM	36°	IP20	3K/4K/6K	BLACK/WHITE	SILVER

ANTI-GLARE

DIMMABLE

TUNEABLE



Optic Trimless 15W

OPTIC TRIMLESS 15W

CODE	SIZE	CUT OUT	BEAM ANGLE	IP CODE	CCT	BODY COLOUR	REFLECTOR COLOUR
CTR-WT15-001	86x100MM	75MM	36°	IP20	3K/4K/6K	BLACK/WHITE	PEARL BLACK
CTR-WT15-002	86x100MM	75MM	36°	IP20	3K/4K/6K	BLACK/WHITE	MATT BLACK
CTR-WT15-003	86x100MM	75MM	36°	IP20	3K/4K/6K	BLACK/WHITE	GOLD
CTR-WT15-004	86x100MM	75MM	36°	IP20	3K/4K/6K	BLACK/WHITE	WHITE
CTR-WT15-005	86x100MM	75MM	36°	IP20	3K/4K/6K	BLACK/WHITE	CHROME
CTR-WT15-006	86x100MM	75MM	36°	IP20	3K/4K/6K	BLACK/WHITE	SILVER

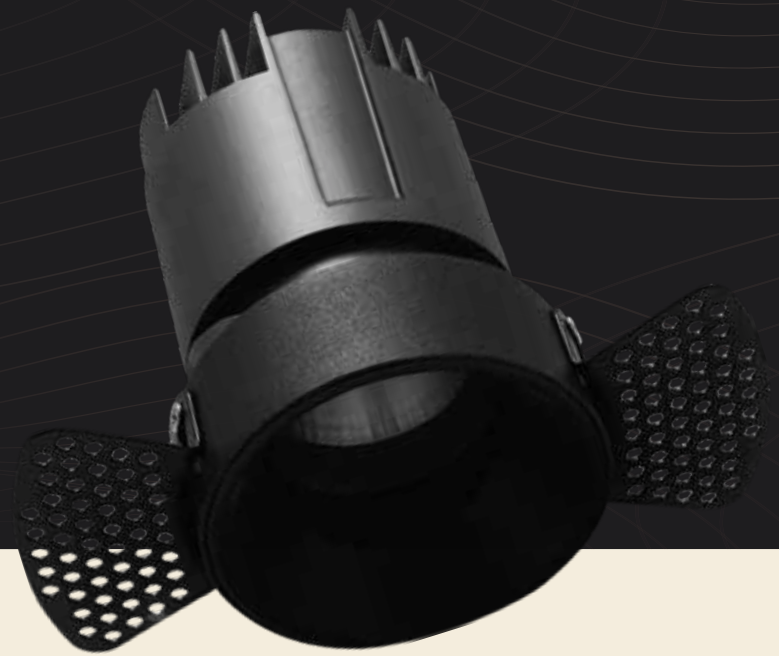

ANTI-GLARE

DIMMABLE

TUNEABLE

Optic Trimless 24W

OPTIC TRIMLESS 24W

CODE	SIZE	CUT OUT	BEAM ANGLE	IP CODE	CCT	BODY COLOUR	REFLECTOR COLOUR
CTR-WT24-001	104x120MM	95MM	36°	IP20	3K/4K/6K	BLACK/WHITE	PEARL BLACK
CTR-WT24-002	104x120MM	95MM	36°	IP20	3K/4K/6K	BLACK/WHITE	MATT BLACK
CTR-WT24-003	104x120MM	95MM	36°	IP20	3K/4K/6K	BLACK/WHITE	GOLD
CTR-WT24-004	104x120MM	95MM	36°	IP20	3K/4K/6K	BLACK/WHITE	WHITE
CTR-WT24-005	104x120MM	95MM	36°	IP20	3K/4K/6K	BLACK/WHITE	CHROME
CTR-WT24-006	104x120MM	95MM	36°	IP20	3K/4K/6K	BLACK/WHITE	SILVER

ANTI-GLARE

DIMMABLE

TUNEABLE



Optic Edge 8W

OPTIC EDGE 8W

CODE	SIZE	CUT OUT	BEAM ANGLE	IP CODE	CCT	BODY COLOUR	REFLECTOR COLOUR
CTR-WE8-001	59x75MM	50MM	36°	IP20	3K/4K/6K	BLACK/WHITE	PEARL BLACK
CTR-WE8-002	59x75MM	50MM	36°	IP20	3K/4K/6K	BLACK/WHITE	MATT BLACK
CTR-WE8-003	59x75MM	50MM	36°	IP20	3K/4K/6K	BLACK/WHITE	GOLD
CTR-WE8-004	59x75MM	50MM	36°	IP20	3K/4K/6K	BLACK/WHITE	WHITE
CTR-WE8-005	59x75MM	50MM	36°	IP20	3K/4K/6K	BLACK/WHITE	CHROME
CTR-WE8-006	59x75MM	50MM	36°	IP20	3K/4K/6K	BLACK/WHITE	SILVER

Optic Edge 15W



ANTI-GLARE

DIMMABLE

TUNEABLE

OPTIC EDGE 15W

CODE	SIZE	CUT OUT	BEAM ANGLE	IP CODE	CCT	BODY COLOUR	REFLECTOR COLOUR
CTR-WE15-001	86×100MM	75MM	36°	IP20	3K/4K/6K	BLACK/WHITE	PEARL BLACK
CTR-WE15-002	86×100MM	75MM	36°	IP20	3K/4K/6K	BLACK/WHITE	MATT BLACK
CTR-WE15-003	86×100MM	75MM	36°	IP20	3K/4K/6K	BLACK/WHITE	GOLD
CTR-WE15-004	86×100MM	75MM	36°	IP20	3K/4K/6K	BLACK/WHITE	WHITE
CTR-WE15-005	86×100MM	75MM	36°	IP20	3K/4K/6K	BLACK/WHITE	CHROME
CTR-WE15-006	86×100MM	75MM	36°	IP20	3K/4K/6K	BLACK/WHITE	SILVER

ANTI-GLARE

DIMMABLE

TUNEABLE



Optic Edge 24W

OPTIC EDGE 24W

CODE	SIZE	CUT OUT	BEAM ANGLE	IP CODE	CCT	BODY COLOUR	REFLECTOR COLOUR
CTR-WE24-001	104x120MM	95MM	36°	IP20	3K/4K/6K	BLACK/WHITE	PEARL BLACK
CTR-WE24-002	104x120MM	95MM	36°	IP20	3K/4K/6K	BLACK/WHITE	MATT BLACK
CTR-WE24-003	104x120MM	95MM	36°	IP20	3K/4K/6K	BLACK/WHITE	GOLD
CTR-WE24-004	104x120MM	95MM	36°	IP20	3K/4K/6K	BLACK/WHITE	WHITE
CTR-WE24-005	104x120MM	95MM	36°	IP20	3K/4K/6K	BLACK/WHITE	CHROME
CTR-WE24-006	104x120MM	95MM	36°	IP20	3K/4K/6K	BLACK/WHITE	SILVER

ANTI-GLARE

DIMMABLE

TUNEABLE



Optic Twin 2X8W

OPTIC TWIN 2X8W

CODE	SIZE	CUT OUT	BEAM ANGLE	IP CODE	CCT	BODY COLOUR	REFLECTOR COLOUR
CTR-WE2x8-001-RD	140x80x84MM	130x70MM	36°	IP20	3K/4K/6K	BLACK/WHITE	PEARL BLACK
CTR-WE2x8-002-RD	140x80x84MM	130x70MM	36°	IP20	3K/4K/6K	BLACK/WHITE	MATT BLACK
CTR-WE2x8-003-RD	140x80x84MM	130x70MM	36°	IP20	3K/4K/6K	BLACK/WHITE	GOLD
CTR-WE2x8-004-RD	140x80x84MM	130x70MM	36°	IP20	3K/4K/6K	BLACK/WHITE	WHITE
CTR-WE2x8-005-RD	140x80x84MM	130x70MM	36°	IP20	3K/4K/6K	BLACK/WHITE	CHROME
CTR-WE2x8-006-RD	140x80x84MM	130x70MM	36°	IP20	3K/4K/6K	BLACK/WHITE	SILVER

OPTIC TWIN 2X15W

CODE	SIZE	CUT OUT	BEAM ANGLE	IP CODE	CCT	BODY COLOUR	REFLECTOR COLOUR
CTR-WE2x15-001-RD	194x104x113MM	180x75MM	36°	IP20	3K/4K/6K	BLACK/WHITE	PEARL BLACK
CTR-WE2x15-002-RD	194x104x113MM	180x75MM	36°	IP20	3K/4K/6K	BLACK/WHITE	MATT BLACK
CTR-WE2x15-003-RD	194x104x113MM	180x75MM	36°	IP20	3K/4K/6K	BLACK/WHITE	GOLD
CTR-WE2x15-004-RD	194x104x113MM	180x75MM	36°	IP20	3K/4K/6K	BLACK/WHITE	WHITE
CTR-WE2x15-005-RD	194x104x113MM	180x75MM	36°	IP20	3K/4K/6K	BLACK/WHITE	CHROME
CTR-WE2x15-006-RD	194x104x113MM	180x75MM	36°	IP20	3K/4K/6K	BLACK/WHITE	SILVER

Optic
Twin 2X15W



OPTIC SQUARE 12W

CODE	CTR-WE12-SQ
SIZE	89x89x120MM
CUT OUT	82MM
BEAM ANGLE	36°
IP CODE	IP20
CCT	3K/4K/6K
BODY COLOUR	WHITE
REFLECTOR COLOUR	PEARL BLACK

Optic Square 12W





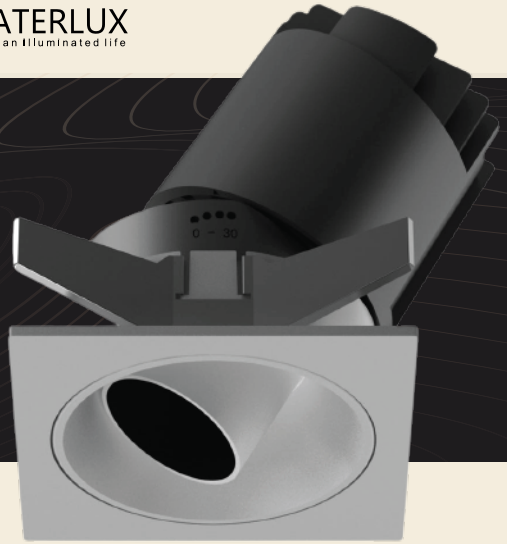

Optic Square

Pop Up 12W

ANTI-GLARE

DIMMABLE

TUNEABLE

OPTIC SQUARE POP UP 12W

CODE	SIZE	CUT OUT	BEAM ANGLE	IP CODE	CCT	BODY COLOUR	REFLECTOR COLOUR
CTR-WE12-SQP-001	86X109	75	36°	IP20	3K/4K/6K	WHITE	PEARL BLACK

the LIGHTING

Light up your home with our innovative lighting solutions. From energy-efficient LEDs to stylish fixtures, create the perfect ambience with our range of home lighting options.



Optic Edge

Mini Square 1X8W

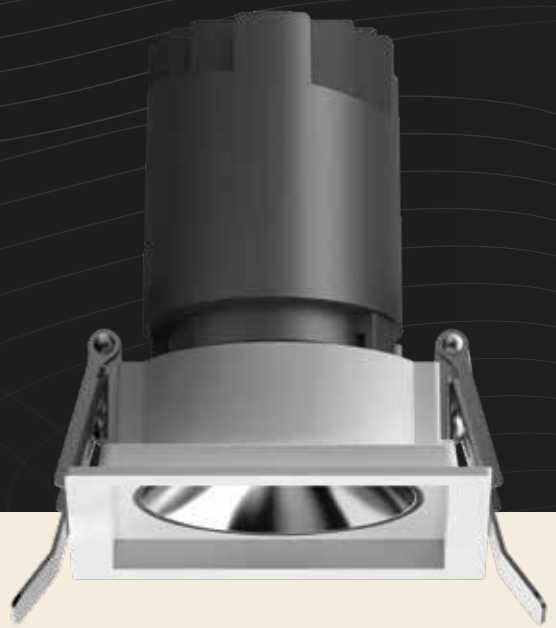

ANTI-GLARE

DIMMABLE

TUNEABLE

OPTIC EDGE MINI SQUARE 1X8W

CODE	SIZE	CUT OUT	BEAM ANGLE	IP CODE	CCT	BODY COLOUR	REFLECTOR COLOUR
CTR-WE1X8-SQ-001	68X68X81	60	36°	IP20	3K/4K/6K	BLACK/WHITE	PEARL BLACK
CTR-WE1X8-SQ-002	68X68X81	60	36°	IP20	3K/4K/6K	BLACK/WHITE	MATT BLACK
CTR-WE1X8-SQ-003	68X68X81	60	36°	IP20	3K/4K/6K	BLACK/WHITE	WHITE
CTR-WE1X8-SQ-004	68X68X81	60	36°	IP20	3K/4K/6K	BLACK/WHITE	GOLD
CTR-WE1X8-SQ-005	68X68X81	60	36°	IP20	3K/4K/6K	BLACK/WHITE	CHROME
CTR-WE1X8-SQ-006	68X68X81	60	36°	IP20	3K/4K/6K	BLACK/WHITE	SILVER

ANTI-GLARE

DIMMABLE

TUNEABLE

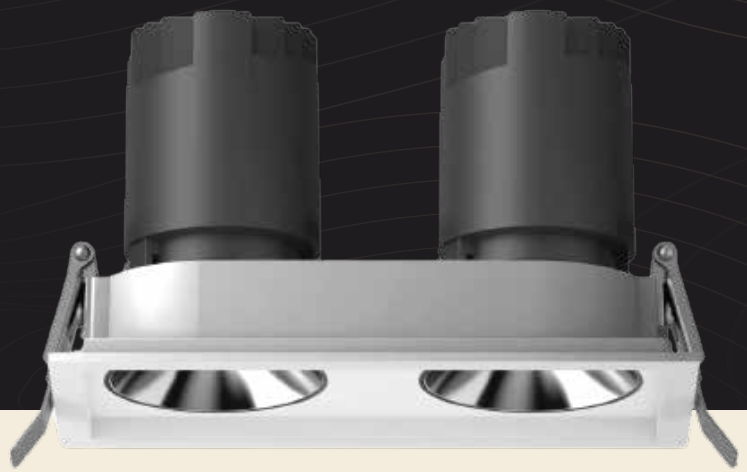

Optic Edge

Mini Square 2X8W

OPTIC EDGE MINI SQUARE 2X8W

CODE	SIZE	CUT OUT	BEAM ANGLE	IP CODE	CCT	BODY COLOUR	REFLECTOR COLOUR
CTR-WE2X8-SQ-001	135X68X81	130X65	36°	IP20	3K/4K/6K	BLACK/WHITE	PEARL BLACK
CTR-WE2X8-SQ-002	135X68X81	130X65	36°	IP20	3K/4K/6K	BLACK/WHITE	MATT BLACK
CTR-WE2X8-SQ-003	135X68X81	130X65	36°	IP20	3K/4K/6K	BLACK/WHITE	WHITE
CTR-WE2X8-SQ-004	135X68X81	130X65	36°	IP20	3K/4K/6K	BLACK/WHITE	GOLD
CTR-WE2X8-SQ-005	135X68X81	130X65	36°	IP20	3K/4K/6K	BLACK/WHITE	CHROME
CTR-WE2X8-SQ-006	135X68X81	130X65	36°	IP20	3K/4K/6K	BLACK/WHITE	SILVER

OPTIC EDGE MINI SQUARE 3X8W

CODE	SIZE	CUT OUT	BEAM ANGLE	IP CODE	CCT	BODY COLOUR	REFLECTOR COLOUR
CTR-WE3X8-SQ-001	202X68X81	200X65	36°	IP20	3K/4K/6K	BLACK/WHITE	PEARL BLACK
CTR-WE3X8-SQ-002	202X68X81	200X65	36°	IP20	3K/4K/6K	BLACK/WHITE	MATT BLACK
CTR-WE3X8-SQ-003	202X68X81	200X65	36°	IP20	3K/4K/6K	BLACK/WHITE	WHITE
CTR-WE3X8-SQ-004	202X68X81	200X65	36°	IP20	3K/4K/6K	BLACK/WHITE	GOLD
CTR-WE3X8-SQ-005	202X68X81	200X65	36°	IP20	3K/4K/6K	BLACK/WHITE	CHROME
CTR-WE3X8-SQ-006	202X68X81	200X65	36°	IP20	3K/4K/6K	BLACK/WHITE	SILVER



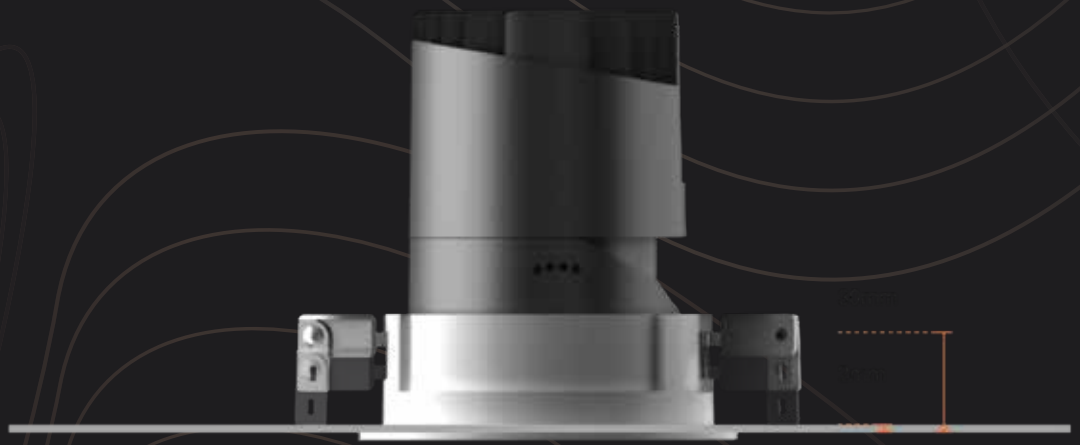

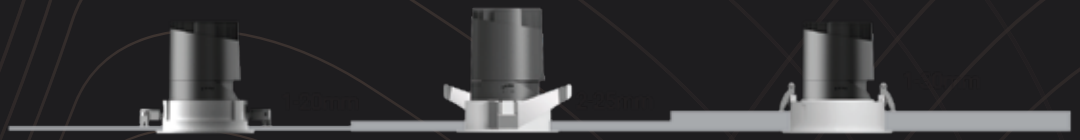



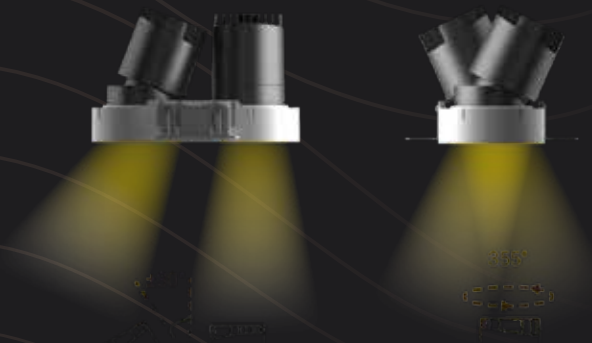

Leaf
6,12W



ANTI-GLARE

DIMMABLE

TUNEABLE

LEAF 6,12W

CODE	POWER	SIZE	CUT OUT	BEAM ANGLE	IP CODE	CCT	BODY COLOUR	REFLECTOR COLOUR
CTR-LE6	6WATT	70x63MM	60MM	36°	IP20	3K/4K/6K	WHITE	GREY
CTR-LE12	12WATT	85x76MM	75MM	36°	IP20	3K/4K/6K	WHITE	GREY

BINGO 6,8,12W

CODE	POWER	SIZE	CUT OUT	BEAM ANGLE	IP CODE	CCT	BODY COLOUR	REFLECTOR COLOUR
CTR-BN6	6WATT	65x30MM	55MM	35°	IP20	3K/4K/6K	WHITE	GREY
CTR-BN8	8WATT	75x30MM	65MM	35°	IP20	3K/4K/6K	WHITE	GREY
CTR-BN12	12WATT	85x35MM	75MM	35°	IP20	3K/4K/6K	WHITE	GREY



OLIVIA 6,12,18W

CODE	POWER	SIZE	CUT OUT	BEAM ANGLE	IP CODE	CCT	BODY COLOUR
CTR-D6	6WATT	60x40MM	55MM	38°	IP20	3K/4K/6K	BLACK
CTR-D12	12WATT	82x50MM	75MM	38°	IP20	3K/4K/6K	BLACK
CTR-D18	18WATT	100x52MM	95MM	38°	IP20	3K/4K/6K	BLACK



MAGNA 6,8,12W

CODE	POWER	SIZE	CUT OUT	BEAM ANGLE	IP CODE	CCT	BODY COLOUR	REFLECTOR COLOUR
CTR-MG6-001	6W	35X64	30	36°	IP20	3K/4K/6K	BLACK	BLACK
CTR-MG8-002	8W	45X69	40	36°	IP20	3K/4K/6K	BLACK	BLACK
CTR-MG12-003	12W	55X71	50	36°	IP20	3K/4K/6K	BLACK	BLACK



Fusion Pro
7W



ANTI-GLARE

DIMMABLE

FUSION PRO 7W

CODE	SIZE	CUT OUT	BEAM ANGLE	IP CODE	CCT	BODY COLOUR	SHAPE
CTR-FP7-RD-001	60	55	36°	IP20	3K/4K/6K	WHITE	ROUND
CTR-FP7-RD-002	60	55	36°	IP20	3K/4K/6K	BLACK	ROUND

FUSION PRO 12W

CODE	SIZE	CUT OUT	BEAM ANGLE	IP CODE	CCT	BODY COLOUR	SHAPE
CTR-FP12-RD-001	80	75	36°	IP20	3K/4K/6K	WHITE	ROUND
CTR-FP12-RD-002	80	75	36°	IP20	3K/4K/6K	BLACK	ROUND

ANTI-GLARE

DIMMABLE

TUNEABLE



Fusion Pro
12W

Bliss Curve

10W



ANTI-GLARE

DIMMABLE

TUNEABLE

BLISS CURVE 10W

CODE	SIZE	CUT OUT	BEAM ANGLE	IP CODE	CCT	BODY COLOUR	REFLECTOR COLOUR
CTR-BL-C10-001	54X63MM	45MM	36°	IP20	3K/4K/6K	WHITE	MATT BLACK
CTR-BL-C10-002	54X63MM	45MM	36°	IP20	3K/4K/6K	WHITE	MATT WHITE
CTR-BL-C10-003	54X63MM	45MM	36°	IP20	3K/4K/6K	WHITE	GUN BLACK
CTR-BL-C10-004	54X63MM	45MM	36°	IP20	3K/4K/6K	BLACK	MATT BLACK
CTR-BL-C10-005	54X63MM	45MM	36°	IP20	3K/4K/6K	BLACK	MATT WHITE
CTR-BL-C10-006	54X63MM	45MM	36°	IP20	3K/4K/6K	BLACK	GUN BLACK

ANTI-GLARE

DIMMABLE

TUNEABLE



Bliss Straight
10 W

BLISS STRAIGHT 10W

CODE	SIZE	CUT OUT	BEAM ANGLE	IP CODE	CCT	BODY COLOUR	REFLECTOR COLOUR
CTR-BL-S10-001	54X82MM	45MM	36°	IP20	3K/4K/6K	WHITE	MATT BLACK
CTR-BL-S10-002	54X82MM	45MM	36°	IP20	3K/4K/6K	WHITE	MATT WHITE
CTR-BL-S10-003	54X82MM	45MM	36°	IP20	3K/4K/6K	WHITE	GUN BLACK
CTR-BL-S10-004	54X82MM	45MM	36°	IP20	3K/4K/6K	BLACK	MATT BLACK
CTR-BL-S10-005	54X82MM	45MM	36°	IP20	3K/4K/6K	BLACK	MATT WHITE
CTR-BL-S10-006	54X82MM	45MM	36°	IP20	3K/4K/6K	BLACK	GUN BLACK

Bliss Pointer
10W



ANTI-GLARE

DIMMABLE

TUNEABLE

BLISS POINTER 10W

CODE	SIZE	CUT OUT	BEAM ANGLE	IP CODE	CCT	BODY COLOUR
CTR-BL-P-10	48X82MM	45MM	24°	IP20	3K/4K/6K	WHITE

CATERLUX
Live an illuminated life

WWW.CATERLUX.IN

TRITON



TRITON DOWNLIGHT 8W

CODE	SIZE	CUT OUT	BEAM ANGLE	IP CODE	CCT	BODY COLOUR	REFLECTOR COLOUR	FRAME
CTR-T-DL8-001	83	70	36°	IP20	3K/4K/6K	WHITE	WHITE	EDGE
CTR-T-DL8-002	83	70	36°	IP20	3K/4K/6K	WHITE	PEARL BLACK	EDGE
CTR-T-DL8-003	83	70	36°	IP20	3K/4K/6K	WHITE	WHITE	TRIMLESS
CTR-T-DL8-004	83	70	36°	IP20	3K/4K/6K	WHITE	PEARL BLACK	TRIMLESS



Triton Downlight 8W

Triton Panel Light
8W



ANTI-GLARE

DIMMABLE

TUNEABLE

TRITON PANEL LIGHT 8W

CODE	SIZE	CUT OUT	BEAM ANGLE	IP CODE	CCT	BODY COLOUR	FRAME
CTR-T-PL8-001	83MM	70MM	120°	IP20	3K/4K/6K	WHITE	EDGE
CTR-T-PL8-002	83MM	70MM	120°	IP20	3K/4K/6K	WHITE	TRIMLESS

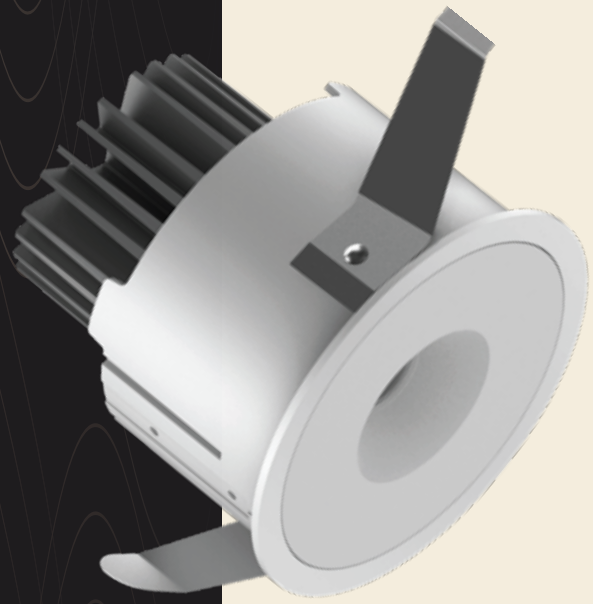

Triton Pointer

8W

ANTI-GLARE

DIMMABLE

TUNEABLE

TRITON POINTER 8W

CODE	CTR-T-P8-001	CTR-T-P8-002
SIZE	83MM	83MM
CUT OUT	70MM	70MM
BEAM ANGLE	24°	24°
IP CODE	IP20	IP20
CCT	3K/4K/6K	3K/4K/6K
BODY COLOUR	WHITE	WHITE
FRAME	EDGE	TRIMLESS

ANTI-GLARE

DIMMABLE

TUNEABLE

Triton Cone Spotlight

8W

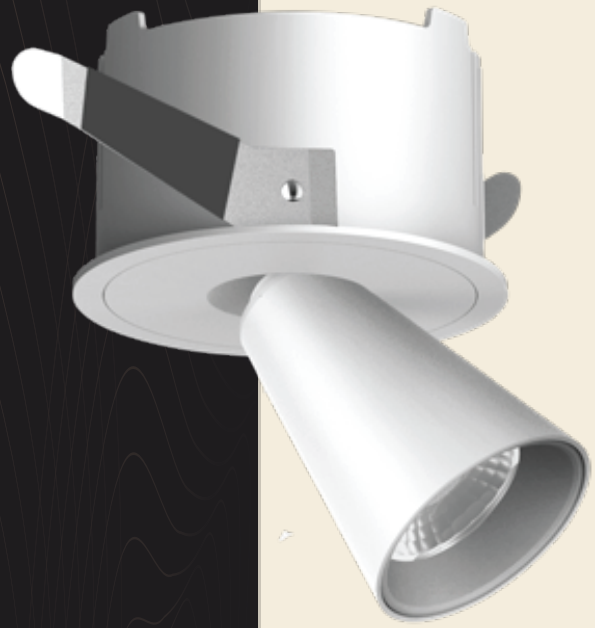

TRITON CONE SPOTLIGHT 8W

CODE	CTR-T-CS-001	CTR-T-CS-002
SIZE	83MM	83MM
CUT OUT	70MM	70MM
BEAM ANGLE	38°	38 °
IP CODE	IP20	IP20
CCT	3K/4K/6K	3K/4K/6K
BODY COLOUR	WHITE	WHITE
FRAME	EDGE	TRIMLESS

Triton Wall Washer

8W

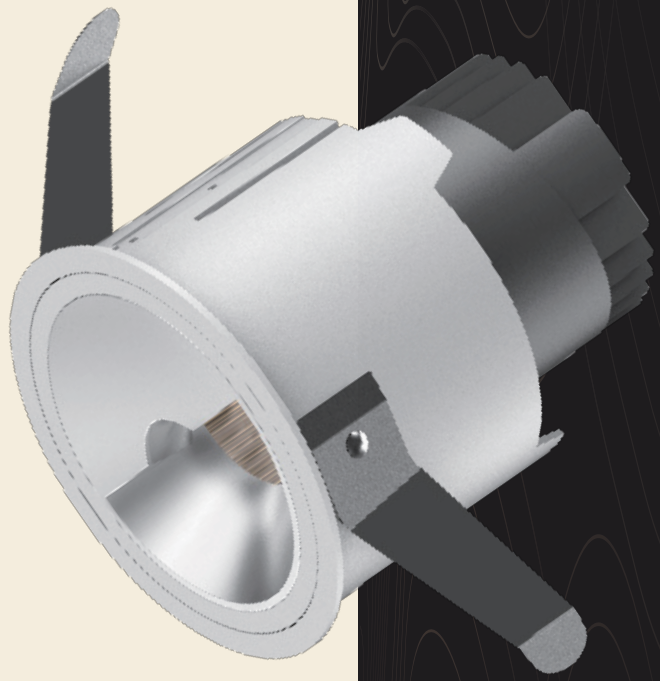

TRITON WALL WASHER 8W

CODE	CTR-T-WL8-001	CTR-T-WL8-002
SIZE	83MM	83MM
CUT OUT	70MM	70MM
BEAM ANGLE	15°	15°
IP CODE	IP20	IP20
CCT	3K/4K/6K	3K/4K/6K
BODY COLOUR	WHITE	WHITE
FRAME	EDGE	TRIMLESS



ANTI-GLARE

DIMMABLE

TUNEABLE

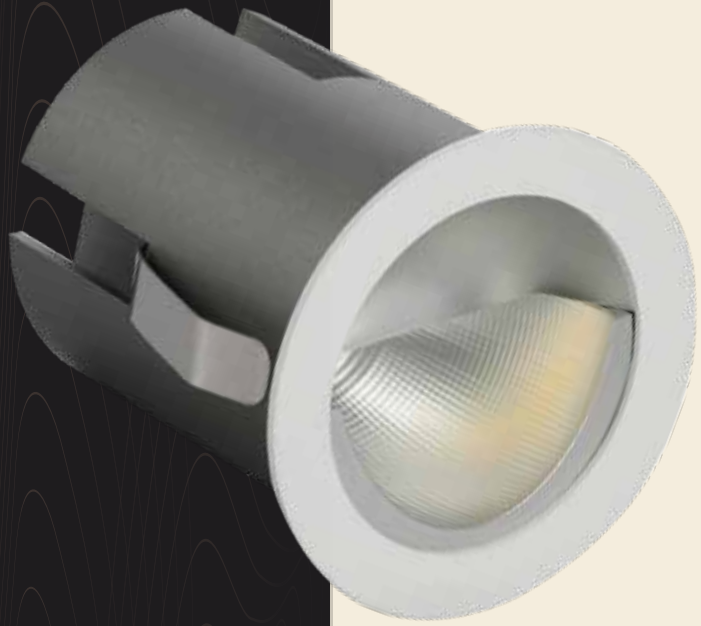

Trace

10W

TRACE 10W

CODE	CTR-TR10-001
SIZE	64X71MM
CUT OUT	55MM
BEAM ANGLE	15°
IP CODE	IP44
CCT	3K/4K
BODY COLOUR	BLACK
VOLTAGE	DC24V

Pattern
7,12W

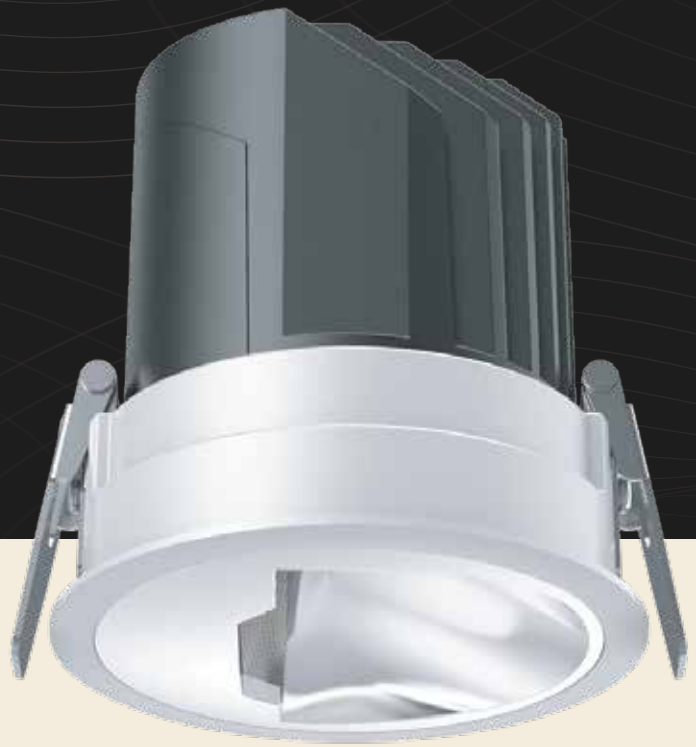

ANTI-GLARE

DIMMABLE

TUNEABLE

PATTERN 7,12W

CODE	SIZE	CUT OUT	BEAM ANGLE	IP CODE	CCT	BODY COLOUR
CTR-PR7-001	61X84MM	55MM	15°	IP20	3K/4K/6K	BLACK
CTR-PR12-002	80X84MM	75MM	15°	IP20	3K/4K/6K	BLACK

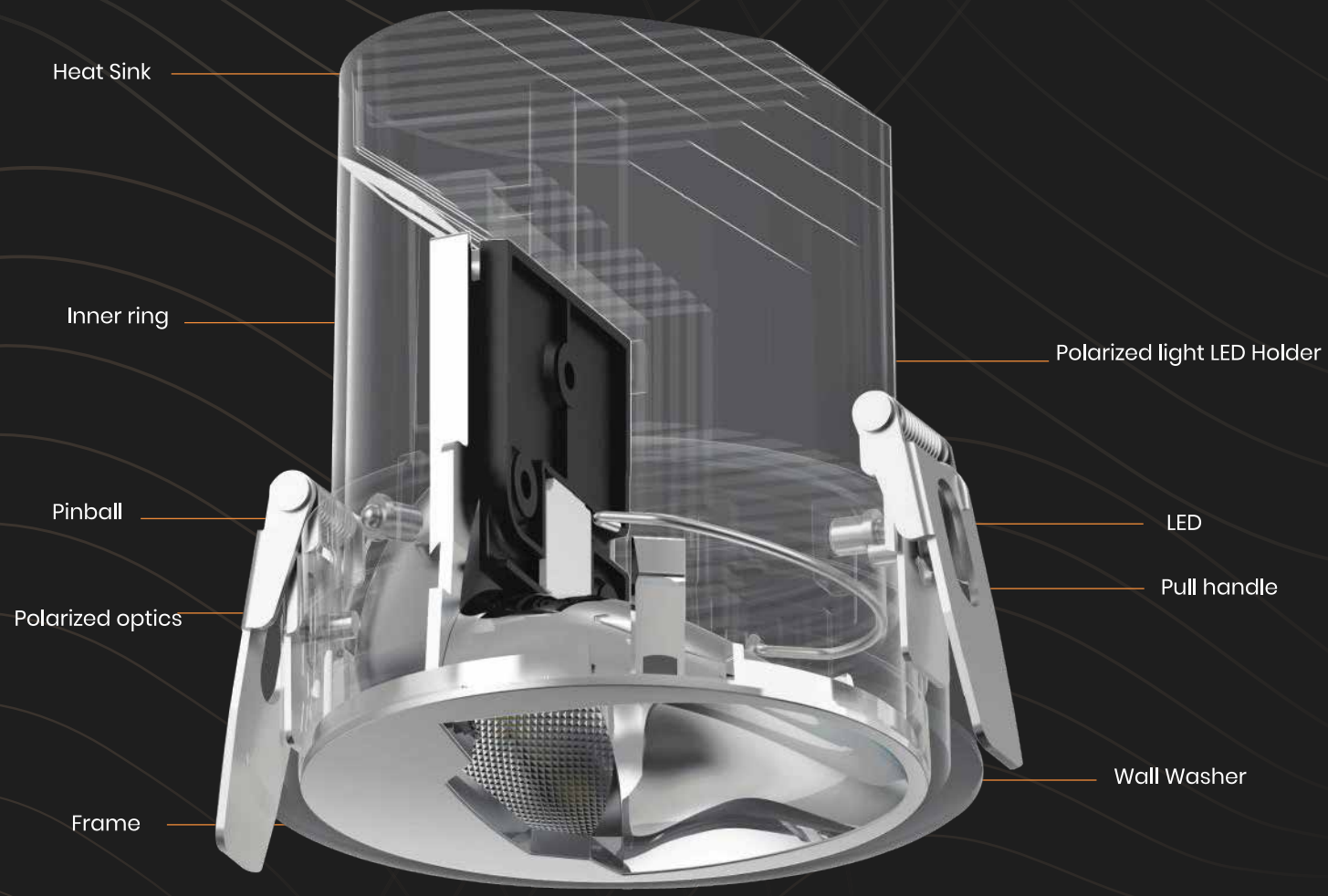
Heat Sink
Inner ring
Pinball
Polarized optics
Frame
Polarized light LED Holder
LED
Pull handle
Wall Washer

Ivy 6W



ANTI-GLARE

DIMMABLE

TUNEABLE

IVY 6W

CODE	SIZE	CUT OUT	BEAM ANGLE	IP CODE	CCT	BODY COLOUR
CTR-IY6-001	52X63MM	45MM	36°	IP20	3K/4K/6K	ANTIQUE BRASS
CTR-IY6-002	52X63MM	45MM	36°	IP20	3K/4K/6K	BRUSH NICKEL
CTR-IY6-003	52X63MM	45MM	36°	IP20	3K/4K/6K	BLACK CHROME

ANTI-GLARE

DIMMABLE

TUNEABLE

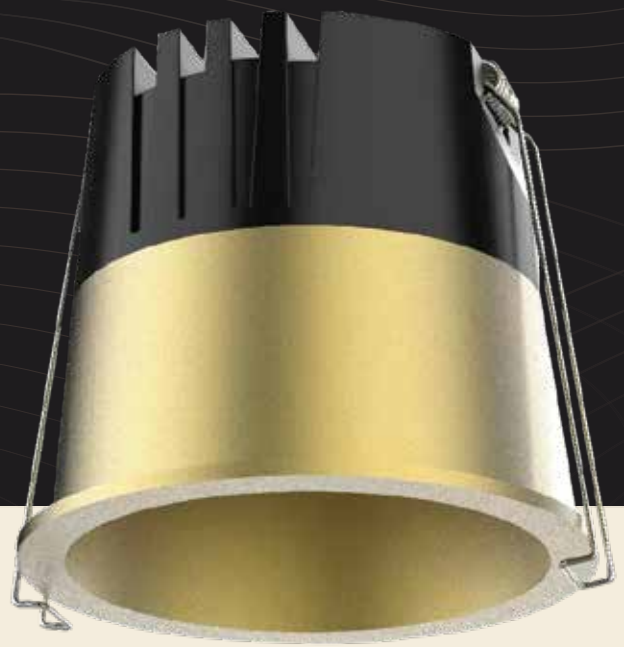

Ivy 8W

IVY 8W

CODE	SIZE	CUT OUT	BEAM ANGLE	IP CODE	CCT	BODY COLOUR
CTR-IY8-001	62X63MM	55MM	36°	IP20	3K/4K/6K	ANTIQUE BRASS
CTR-IY8-002	62X63MM	55MM	36°	IP20	3K/4K/6K	BRUSH NICKEL
CTR-IY8-003	62X63MM	55MM	36°	IP20	3K/4K/6K	BLACK CHROME

Ivy 12W



ANTI-GLARE

DIMMABLE

TUNEABLE

IVY 12W

CODE	SIZE	CUT OUT	BEAM ANGLE	IP CODE	CCT	BODY COLOUR
CTR-IY12-001	71X68MM	65MM	36°	IP20	3K/4K/6K	ANTIQUE BRASS
CTR-IY12-002	71*68MM	65MM	36°	IP20	3K/4K/6K	BRUSH NICKEL
CTR-IY12-003	71X68MM	65MM	36°	IP20	3K/4K/6K	BLACK CHROME

ANTI-GLARE

DIMMABLE

TUNEABLE



Ivy Surface
12W

IVY SURFACE 12W

CODE	CTR-IY-S12-001
SIZE	75X95MM
BEAM ANGLE	36°
IP CODE	IP65
CCT	3K/4K/6K
BODY COLOUR	GUN BLACK

ANTI-GLARE

DIMMABLE

TUNEABLE



Mega 6W

MEGA 6W

CODE	CTR-M6-001	CTR-M6-002
SIZE	65x70MM	65x70MM
BEAM ANGLE	36°	36°
IP CODE	IP20	IP20
CCT	3K/4K/6K	3K/4K/6K
BODY COLOUR	WHITE	BLACK

TRIAD 12W

CODE	CTR-T12
SIZE	86x80MM
BEAM ANGLE	36°
IP CODE	IP20
CCT	3K/4K/6K
BODY COLOUR	GREY

Triad 12W



BENZ 1WAY-12W

CODE	SIZE	CUT OUT	BEAM ANGLE	IP CODE	CCT	BODY COLOUR	REFLECTOR COLOUR	SHAPE
CTR-BE1x12W	84x84x67MM	75x75MM	36°	IP20	3K/4K/6K	WHITE	PEARL BLACK	SQUARE

BENZ 2WAY-2x12W

CODE	SIZE	CUT OUT	BEAM ANGLE	IP CODE	CCT	BODY COLOUR	REFLECTOR COLOUR	SHAPE
CTR-BE2x12W	84x167x67MM	75x155MM	36°	IP20	3K/4K/6K	WHITE	PEARL BLACK	SQUARE

BENZ 3WAY-3x12W

CODE	SIZE	CUT OUT	BEAM ANGLE	IP CODE	CCT	BODY COLOUR	REFLECTOR COLOUR	SHAPE
CTR-BE3x12W	84x250x67MM	75x250MM	36°	IP20	3K/4K/6K	WHITE	PEARL BLACK	SQUARE

BENZ 1WAY ROUND-12W

CODE	SIZE	CUT OUT	BEAM ANGLE	IP CODE	CCT	BODY COLOUR	REFLECTOR COLOUR	SHAPE
CTR-BE1x12W-RD	87x60MM	72MM	36°	IP20	3K/4K/6K	WHITE	PEARL BLACK	ROUND

Benz Series



1 WAY SQUARE

2 WAY SQUARE





3 WAY SQUARE

1 WAY ROUND



ANTI-GLARE

DIMMABLE

TUNEABLE

Grace 7W





GRACE 7W

CODE	SIZE	CUT OUT	BEAM ANGLE	IP CODE	CCT	BODY COLOUR	SHAPE
CTR-GR7-RD-001	61X93	55	38°	IP20	3K/4K/6K	WHITE	ROUND
CTR-GR7-RD-002	61X93	55	38°	IP20	3K/4K/6K	BLACK	ROUND
CTR-GR7-SQ-001	63X63X94	55X55	38°	IP20	3K/4K/6K	WHITE	SQUARE
CTR-GR7-SQ-002	63X63X94	55X55	38°	IP20	3K/4K/6K	BLACK	SQUARE

GRACE 12W

CODE	SIZE	CUT OUT	BEAM ANGLE	IP CODE	CCT	BODY COLOUR	SHAPE
CTR-GR12-RD-001	84X104	75	38°	IP20	3K/4K/6K	WHITE	ROUND
CTR-GR12-RD-002	84X104	75	38°	IP20	3K/4K/6K	BLACK	ROUND
CTR-GR12-SQ-001	84X84X116	75X75	38°	IP20	3K/4K/6K	WHITE	SQUARE
CTR-GR12-SQ-002	84X84X116	75X75	38°	IP20	3K/4K/6K	BLACK	SQUARE



Grace
12W

Grace 2X7W



ANTI-GLARE

DIMMABLE

TUNEABLE

GRACE 2X7W

CODE	SIZE	CUT OUT	BEAM ANGLE	IP CODE	CCT	BODY COLOUR	SHAPE
CTR-GR2X7-SQ-001	129X68X91	122X58	38°	IP20	3K/4K/6K	WHITE	SQUARE
CTR-GR2X7-SQ-002	129X68X91	122X58	38°	IP20	3K/4K/6K	BLACK	SQUARE

GRACE 2X12W

CODE	SIZE	CUT OUT	BEAM ANGLE	IP CODE	CCT	BODY COLOUR	SHAPE
CTR-GR2X12-SQ-001	180X90X116	165X79	38°	IP20	3K/4K/6K	WHITE	SQUARE
CTR-GR2X12-SQ-002	180X90X116	165X79	38°	IP20	3K/4K/6K	BLACK	SQUARE

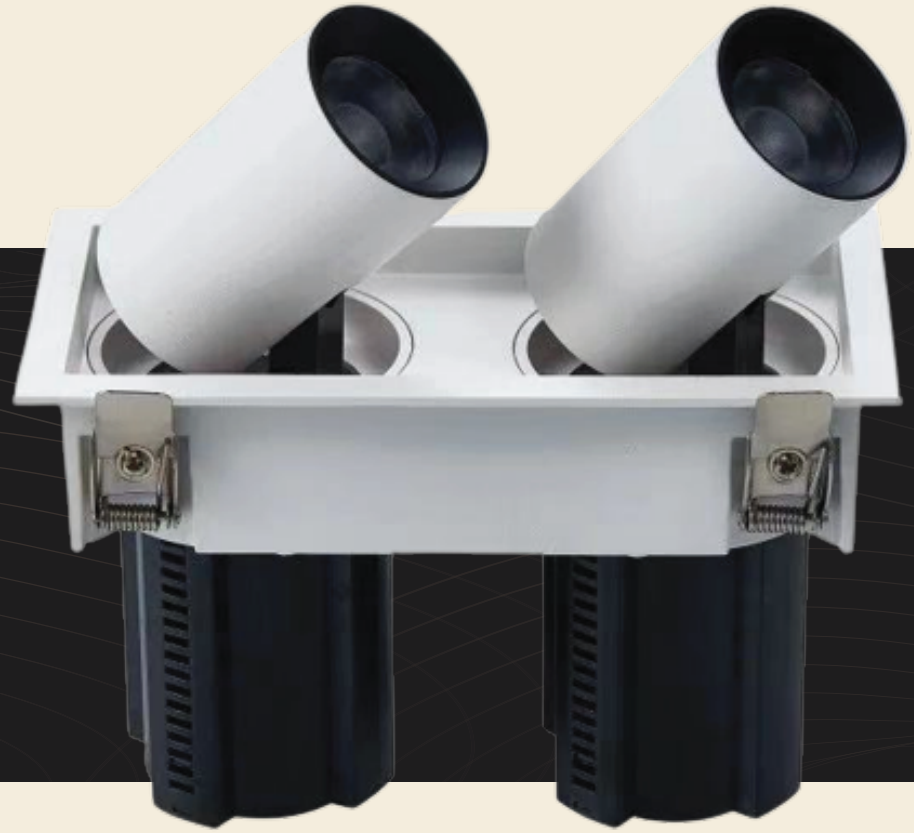

Grace
2X12W



SHARP 2WAY - 4W

CODE	SIZE	CUTOUT	BEAM ANGLE	IP CODE	CCT	BODY COLOUR
CTR-SH-4W-001	52×32×40MM	45×40MM	34°	IP20	3K/4K/6K	WHITE
CTR-SH-4W-002	52×32×40MM	45×40MM	34°	IP20	3K/4K/6K	BLACK

SHARP 3WAY - 6W

CODE	SIZE	CUTOUT	BEAM ANGLE	IP CODE	CCT	BODY COLOUR
CTR-SH-6W-001	62×32×40MM	55×40MM	34°	IP20	3K/4K/6K	WHITE
CTR-SH-6W-002	62×32×40MM	55×40MM	34°	IP20	3K/4K/6K	BLACK

SHARP 4WAY - 8W

CODE	SIZE	CUTOUT	BEAM ANGLE	IP CODE	CCT	BODY COLOUR
CTR-SH-8W-001	52×52×40MM	40×40MM	34°	IP20	3K/4K/6K	WHITE
CTR-SH-8W-002	52×52×40MM	40×40MM	34°	IP20	3K/4K/6K	BLACK

Sharp Series

12 WAY WHITE



6 WAY WHITE



9 WAY BLACK



12 WAY BLACK

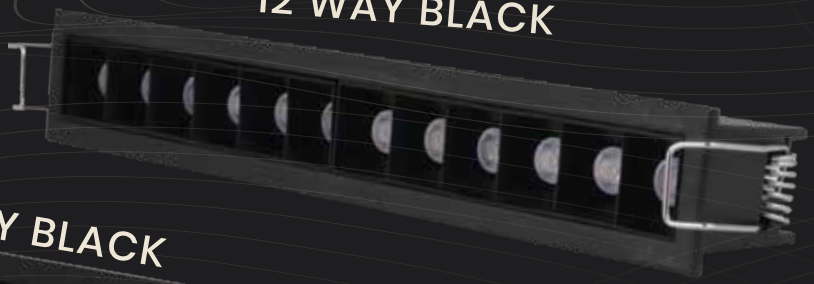

6 WAY BLACK

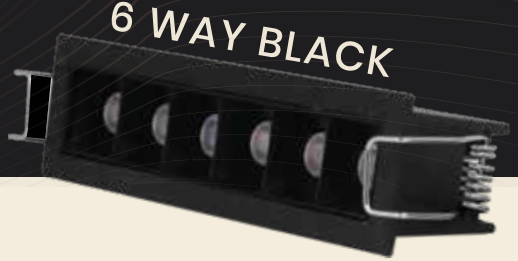







SHARP 6WAY - 10W

CODE	SIZE	CUTOUT	BEAM ANGLE	IP CODE	CCT	BODY COLOUR
CTR-SH-10W-001	108x32x40MM	102x26MM	34°	IP20	3K/4K/6K	WHITE
CTR-SH-10W-002	108x32x40MM	102x26MM	34°	IP20	3K/4K/6K	BLACK

SHARP 9WAY - 15W

CODE	SIZE	CUTOUT	BEAM ANGLE	IP CODE	CCT	BODY COLOUR
CTR-SH-15W-001	71x71x40MM	65x65MM	34°	IP20	3K/4K/6K	WHITE
CTR-SH-15W-002	71x71x40MM	65x65MM	34°	IP20	3K/4K/6K	BLACK

SHARP 12WAY - 20W

CODE	SIZE	CUTOUT	BEAM ANGLE	IP CODE	CCT	BODY COLOUR
CTR-SH-20W-001	204x32x40MM	198x26MM	34°	IP20	3K/4K/6K	WHITE
CTR-SH-120W-002	204x32x40MM	198x26MM	34°	IP20	3K/4K/6K	BLACK



Extro

3 & 6 WAY









EXTRO 3WAY

CODE	POWER	SIZE	CUT OUT	BEAM ANGLE	IP CODE	CCT	BODY COLOUR
CTR-S6	3×2WATT	118×50×55MM	110×50MM	36°	IP20	3K/4K	BLACK

EXTRO 6WAY

CODE	POWER	SIZE	CUT OUT	BEAM ANGLE	IP CODE	CCT	BODY COLOUR
CTR-S12	6×2WATT	235×50×55MM	225×50MM	36°	IP20	3K/4K	BLACK

SHARP DECO 3 WAY (6W)

CODE	SIZE	CUT OUT	BEAM ANGLE	IP CODE	CCT	BODY COLOUR	REFLECTOR COLOUR
CTR-SD6-001	69X31X40	65X27	36°	IP20	3K/4K/6K	WHITE	MATT BLACK
CTR-SD6-002	69X31X40	65X27	36°	IP20	3K/4K/6K	BLACK	MATT BLACK

SHARP DECO 6 WAY (10W)

CODE	SIZE	CUT OUT	BEAM ANGLE	IP CODE	CCT	BODY COLOUR	REFLECTOR COLOUR
CTR-SD10-001	126X31X40	122X27	36°	IP20	3K/4K/6K	WHITE	MATT BLACK
CTR-SD10-002	126X31X40	122X27	36°	IP20	3K/4K/6K	BLACK	MATT BLACK

SHARP DECO 12 WAY (20W)

CODE	SIZE	CUT OUT	BEAM ANGLE	IP CODE	CCT	BODY COLOUR	REFLECTOR COLOUR
CTR-SD20-001	240X31X40	236X27	36°	IP20	3K/4K/6K	WHITE	MATT BLACK
CTR-SD20-002	240X31X40	236X27	36°	IP20	3K/4K/6K	BLACK	MATT BLACK

ANTI-GLARE

DIMMABLE

TUNEABLE

SHARP DECO-3 WAY



SHARP DECO-6 WAY



SHARP DECO-12 WAY



ANTI-GLARE

DIMMABLE

TUNEABLE

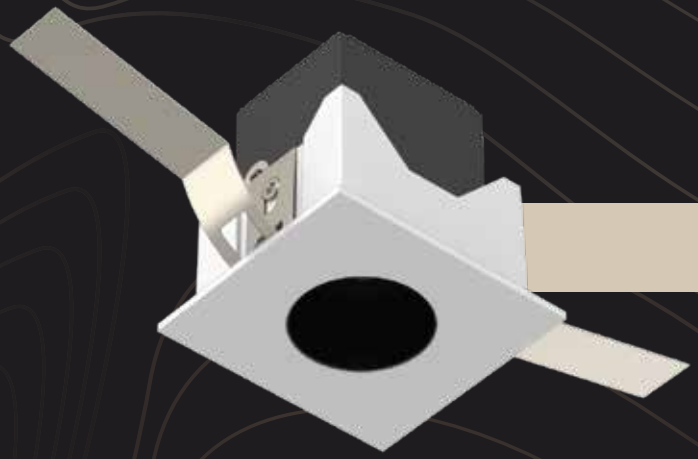

BLADE-1 WAY

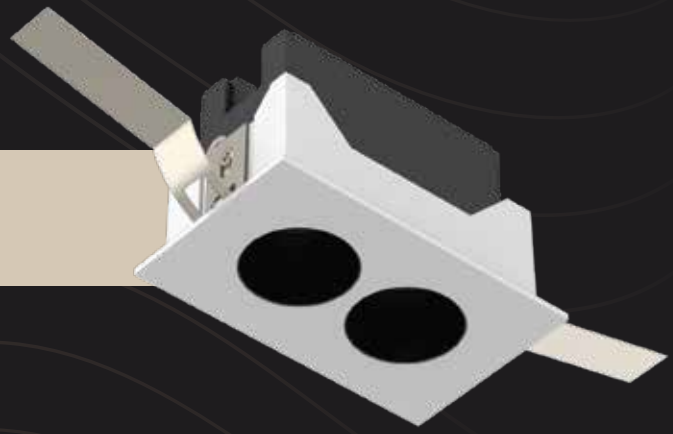

BLADE-2 WAY

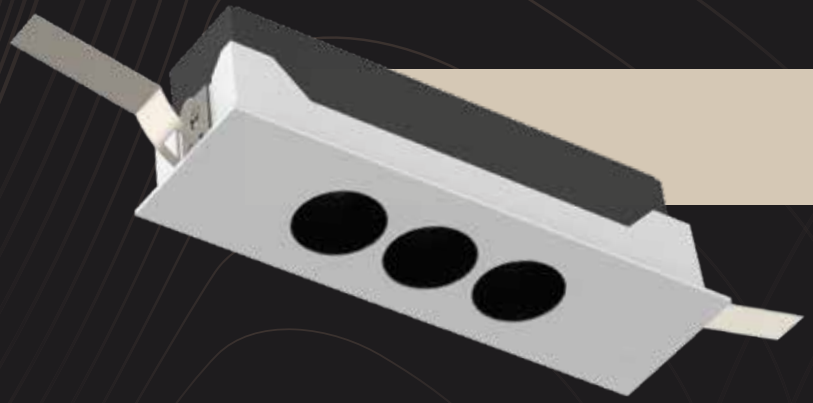

BLADE-3 WAY

BLADE 1 WAY (2W)

CODE	SIZE	CUT OUT	BEAM ANGLE	IP CODE	CCT	BODY COLOUR	REFLECTOR COLOUR
CTR-BL1X2-001	43X46X44	35X41	36°	IP20	3K/4K/6K	WHITE	MATT BLACK

BLADE 2 WAY (4W)

CODE	SIZE	CUT OUT	BEAM ANGLE	IP CODE	CCT	BODY COLOUR	REFLECTOR COLOUR
CTR-BL2X2-001	43X71X44	35X68	36°	IP20	3K/4K/6K	WHITE	MATT BLACK

BLADE 3 WAY (6W)

CODE	SIZE	CUT OUT	BEAM ANGLE	IP CODE	CCT	BODY COLOUR	REFLECTOR COLOUR
CTR-BL3X2-001	43X97X44	35X94	36°	IP20	3K/4K/6K	WHITE	MATT BLACK

BLADE 5 WAY (10W)

CODE	SIZE	CUT OUT	BEAM ANGLE	IP CODE	CCT	BODY COLOUR	REFLECTOR COLOUR
CTR-BL5X2-001	43X150X44	35X147	36°	IP20	3K/4K/6K	WHITE	MATT BLACK

BLADE 10 WAY (20W)

CODE	SIZE	CUT OUT	BEAM ANGLE	IP CODE	CCT	BODY COLOUR	REFLECTOR COLOUR
CTR-BL10X2-001	43X283X44	35X280	36°	IP20	3K/4K/6K	WHITE	MATT BLACK

“ Your Brighter World”

Transform your space with Lighting. Our energy-efficient LEDs and stylish fixtures help you create the perfect ambience, brightening your life with innovation.

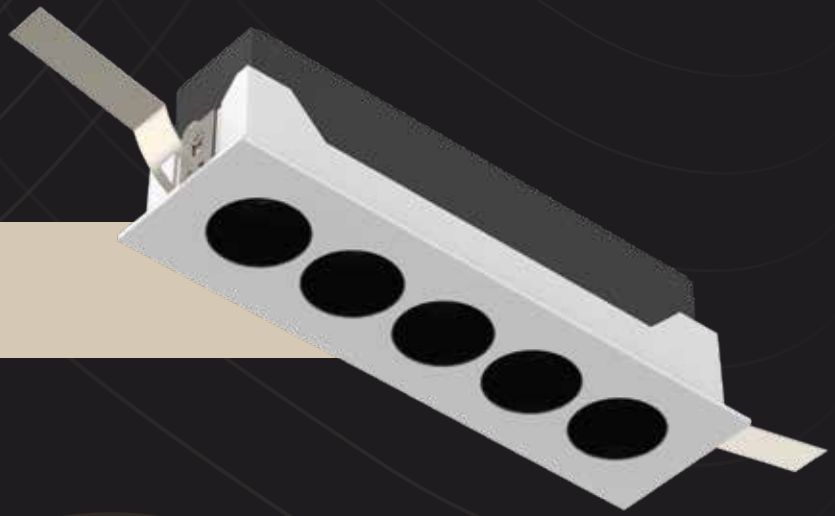

BLADE-5 WAY

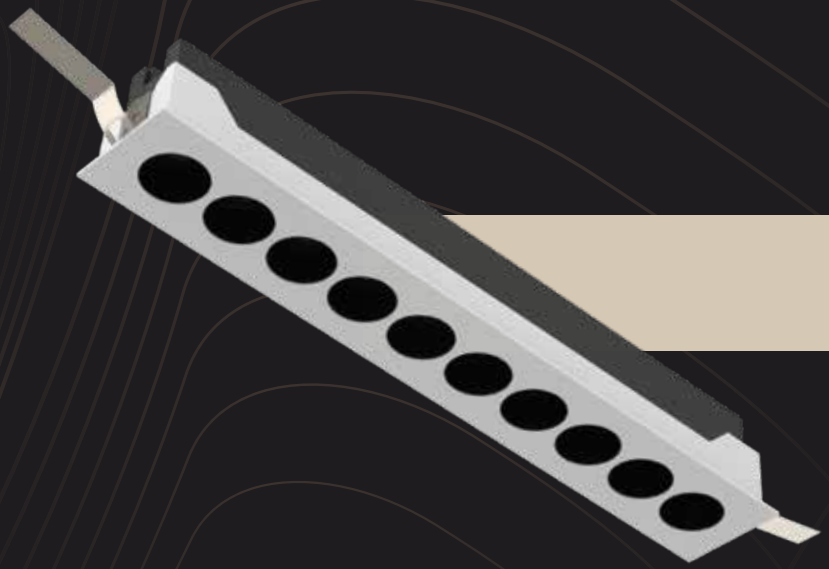

BLADE-10 WAY

ANTI-GLARE

DIMMABLE

TUNEABLE

BULLET RECESSED 300MM

CODE	POWER	SIZE	CUT OUT	BEAM ANGLE	IP CODE	CCT	BODY COLOUR
CTR-X4	4WATT	22×300×19MM	15×290MM	24°	IP20	3K/4K/**6K**	BLACK

BULLET RECESSED 600MM

CODE	POWER	SIZE	CUT OUT	BEAM ANGLE	IP CODE	CCT	BODY COLOUR
CTR-X9	9WATT	22×600×19MM	15×590MM	24°	IP20	3K/4K/**6K**	BLACK

BULLET RECESSED 900MM

CODE	POWER	SIZE	CUT OUT	BEAM ANGLE	IP CODE	CCT	BODY COLOUR
CTR-X15	15WATT	22×900×19MM	15×890MM	24°	IP20	3K/4K/**6K**	BLACK

6K AVAILABLE ON REQUEST

Bullet Recessed

300, 600 & 900 MM







ANTI-GLARE

DIMMABLE

TUNEABLE



Bullet Surface

300, 600 &1024 MM

BULLET SURFACE 300MM

CODE	POWER	SIZE	BEAM ANGLE	IP CODE	CCT	BODY COLOUR
CTR-XS9	9WATT	20x300x17MM	24°	IP20	3K/4K/**6K**	BLACK

BULLET SURFACE 600MM

CODE	POWER	SIZE	BEAM ANGLE	IP CODE	CCT	BODY COLOUR
CTR-XS15	15WATT	20x600x17MM	24°	IP20	3K/4K/**6K**	BLACK

BULLET SURFACE 1024MM

CODE	POWER	SIZE	BEAM ANGLE	IP CODE	CCT	BODY COLOUR
CTR-XS22	22WATT	20x1024x17MM	24°	IP20	3K/4K/**6K**	BLACK

6K AVAILABLE ON REQUEST

ANTI-GLARE

DIMMABLE

TUNEABLE



Bullet Surface Combi 1024MM

BULLET SURFACE COMBI 1024MM

CODE	CTR-XSC22
POWER	22WATT
SIZE	20x1024x17MM
BEAM ANGLE	24°
IP CODE	IP20
CCT	3K/4K/**6K**
BODY COLOUR	BLACK

6K AVAILABLE ON REQUEST

CATERLUX
Live an Illuminated life

WWW.CATERLUX.IN

Bullet Surface Combi



BULLET ADJUSTABLE 600MM

CODE	POWER	SIZE	BEAM ANGLE	IP CODE	CCT	BODY COLOUR	LENGTH
CTR-X18-ADJ-001	18W	600X48X33	25°	IP20	3K/4K/**6K**	BLACK	600MM

BULLET ADJUSTABLE 1200MM

CODE	POWER	SIZE	BEAM ANGLE	IP CODE	CCT	BODY COLOUR	LENGTH
CTR-X38-ADJ-001	38W	1200X48X33	25°	IP20	3K/4K/**6K**	BLACK	1200MM







6K AVAILABLE ON REQUEST



BULLET ADJUSTABLE-600MM

BULLET ADJUSTABLE-1200MM



LINEA WALL WASHER 600MM

CODE	POWER	SIZE	BEAM ANGLE	IP CODE	CCT	BODY COLOUR	LENGTH
CTR-LNW21-001	21W	600X36X26	15°	IP20	3K/4K/**6K**	BLACK	600MM

LINEA WALL WASHER 1200MM

CODE	POWER	SIZE	BEAM ANGLE	IP CODE	CCT	BODY COLOUR	LENGTH
CTR-LNW42-001	42W	1200X36X26	15°	IP20	3K/4K/**6K**	BLACK	1200MM

LINEA DOWNLIGHT 600MM

CODE	POWER	SIZE	BEAM ANGLE	IP CODE	CCT	BODY COLOUR	LENGTH
CTR-LN21-001	21W	600X36X26	50°	IP20	3K/4K/**6K**	BLACK	600MM

LINEA DOWNLIGHT 1200MM

CODE	POWER	SIZE	BEAM ANGLE	IP CODE	CCT	BODY COLOUR	LENGTH
CTR-LN42-001	42W	1200X36X26	50°	IP20	3K/4K/**6K**	BLACK	1200MM









LINEA WALL WASHER-600MM

LINEA WALL WASHER-1200MM

LINEA DOWNLIGHT 600MM

LINEA DOWNLIGHT 1200MM

6K AVAILABLE ON REQUEST

LINEA SURFACE 21W

CODE	SIZE	BEAM ANGLE	IP CODE	CCT	BODY COLOUR	LENGTH
CTR-LN21-S-001	600X26X26	15°	IP65	2700K	BLACK	600MM

LINEA SURFACE 42W

CODE	SIZE	BEAM ANGLE	IP CODE	CCT	BODY COLOUR	LENGTH
CTR-LN42-S-001	1200X26X26	15°	IP65	2700K	BLACK	1200MM

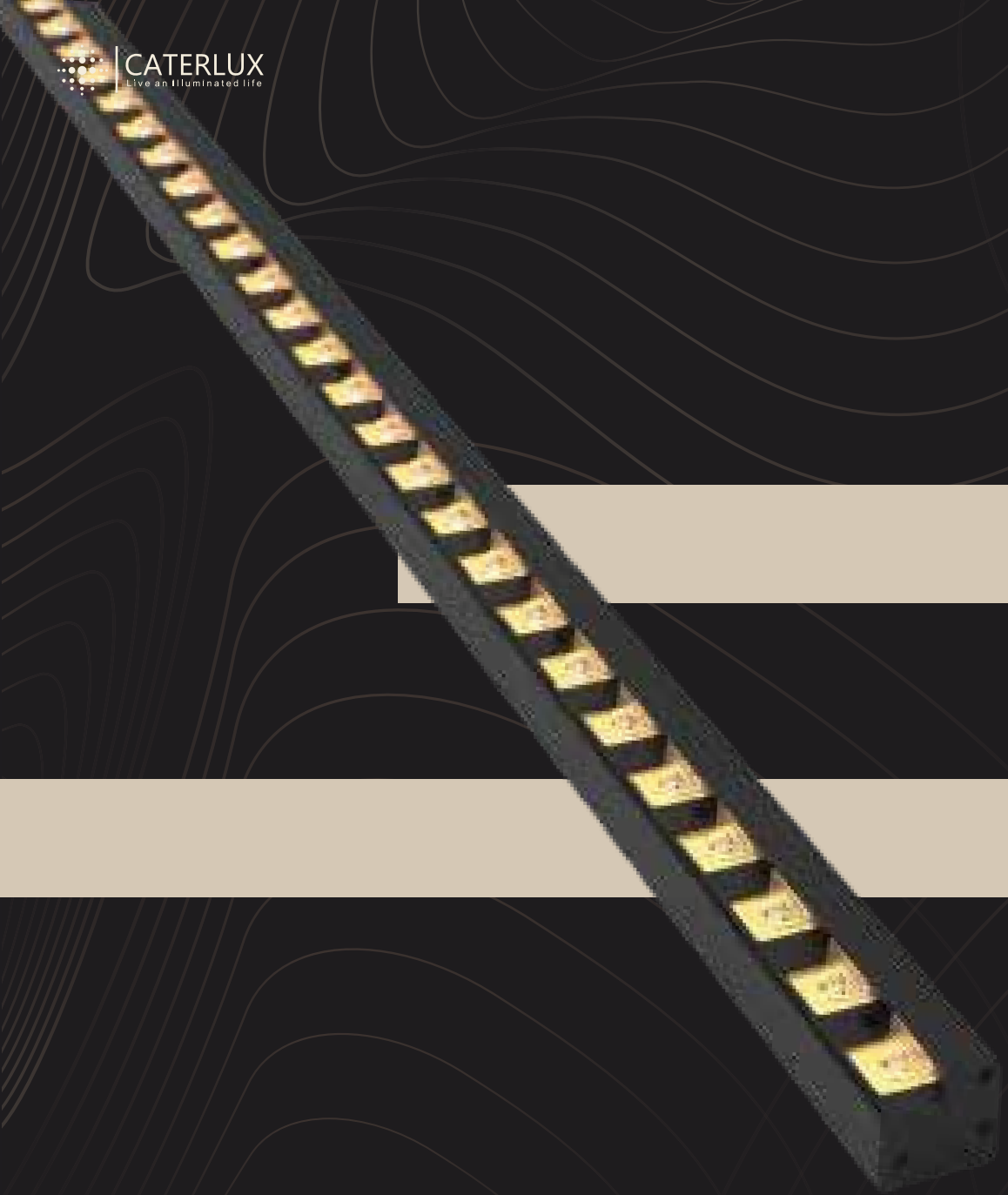

LINEA SURFACE 600MM

LINEA SURFACE 1200MM

ANTI-GLARE

DIMMABLE

TUNEABLE

Tube Series

6W SURFACE



6W RECESS



6W RECESS

12W RECESS

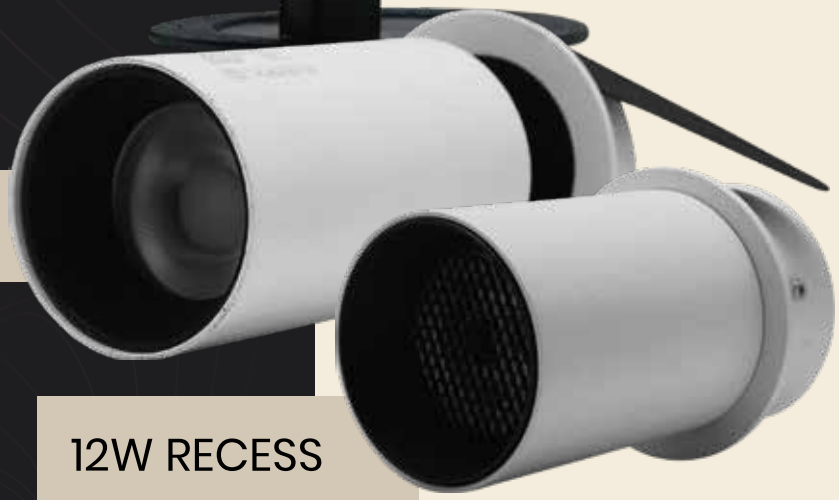

ANTI-GLARE

DIMMABLE

TUNEABLE

TUBE 6 RECESS

CODE	POWER	SIZE	CUT OUT	BEAM ANGLE	IP CODE	CCT	BODY COLOUR	REFLECTOR COLOUR
CTR-T6-R	6WATT	50×102MM	40MM	36°	IP20	3K/4K/**6K**	BLACK/WHITE	BLACK

TUBE 12 RECESS

CODE	POWER	SIZE	CUT OUT	BEAM ANGLE	IP CODE	CCT	BODY COLOUR	REFLECTOR COLOUR
CTR-T12-R	12WATT	73×118MM	67MM	36°	IP20	3K/4K/**6K**	BLACK/WHITE	BLACK

TUBE 6 SURFACE

CODE	POWER	SIZE	CUT OUT	BEAM ANGLE	IP CODE	CCT	BODY COLOUR	REFLECTOR COLOUR
CTR-T6-S	6WATT	38×192MM	-	24°	IP20	3K/4K/**6K**	BLACK/WHITE	BLACK

TUBE 6 PULLOUT

CODE	POWER	SIZE	CUT OUT	BEAM ANGLE	IP CODE	CCT	BODY COLOUR	REFLECTOR COLOUR
CTR-T6-P	6WATT	57×119MM	50MM	36°	IP20	3K/4K/**6K**	BLACK/WHITE	BLACK

TUBE 10 FIX

CODE	POWER	SIZE	CUT OUT	BEAM ANGLE	IP CODE	CCT	BODY COLOUR	REFLECTOR COLOUR
CTR-T10	10WATT	44×90MM	37MM	36°	IP20	3K/4K/**6K**	BLACK/WHITE	BLACK

AQUA 12,20W

CODE	POWER	SIZE	CUT OUT	BEAM ANGLE	IP CODE	CCT	BODY COLOUR
CTR-AQ12	12WATT	84×65MM	75MM	36°	IP65	3K/4K/6K	BLACK
CTR-AQ20	20WATT	104×70MM	95MM	36°	IP65	3K/4K/6K	BLACK



Aqua

12 & 20W

MIST 15W

CODE	CTR-MI15
SIZE	90x90MM
CUT OUT	85MM
BEAM ANGLE	36°
IP CODE	IP65
CCT	3K/4K/6K
BODY COLOUR	WHITE

Mist
15W



DISK 5W

CODE	SIZE	BEAM ANGLE	IP CODE	CCT	BODY COLOUR	SHAPE
CTR-DK5-001	58X25MM	36°	IP67	3K	WHITE	ROUND

ANTI-GLARE

DIMMABLE

TUNEABLE



Disk
5W

ATOM 3,5W

CODE	POWER	SIZE	CUT OUT	BEAM ANGLE	IP CODE	CCT	BODY COLOUR
CTR-AT3-001	3WATT	40×30MM	33MM	24°	IP20	3K/4K/6K	WHITE
CTR-AT3-002	3WATT	40×30MM	33MM	24°	IP20	3K/4K/6K	BLACK
CTR-AT5-001	5WATT	50×33MM	43MM	24°	IP20	3K/4K/6K	WHITE
CTR-AT5-002	5WATT	50×33MM	43MM	24°	IP20	3K/4K/6K	BLACK

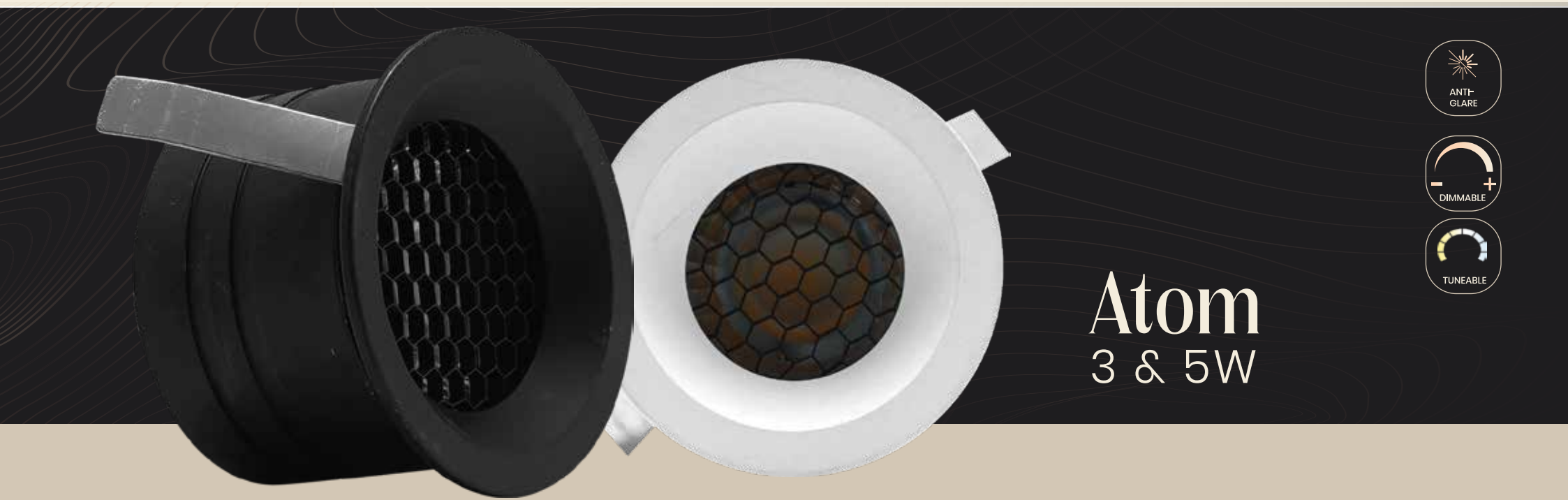

FOCUS 2W

CODE	SIZE	CUT OUT	BEAM ANGLE	IP CODE	CCT	BODY COLOUR
CTR-FC2	Φ48MMXH39MM	Φ40MM	15-36°	IP20	3K	BLACK

SHELL 2W

CODE	SIZE	CUT OUT	BEAM ANGLE	IP CODE	CCT	BODY COLOUR
CTR-SH2-001	Φ19MMXH40MM	Φ15MM	24°	IP20	3K	BLACK

OSLO 3W

CODE	SIZE	CUT OUT	BEAM ANGLE	IP CODE	CCT	BODY COLOUR
CTR-OL3-001	Φ40MMXH25MM	Φ35MM	24°	IP20	3K/4K	BLACK

FOCUS 2W



ANTI-GLARE

DIMMABLE

TUNEABLE

SHELL 2W



OSLO 3W



TORCH 1WAY-1×3W

CODE	SIZE	CRI	BEAM ANGLE	IP CODE	CCT	BODY COLOUR	VOLTAGE
CTR-TO3	66×20MM	>90RA	15°	IP67	3K	BLACK	DC 24V

TORCH 2WAY-2×3W

CODE	SIZE	CRI	BEAM ANGLE	IP CODE	CCT	BODY COLOUR	VOLTAGE
CTR-TO6	77×20MM	>90RA	15°	IP67	3K	BLACK	DC 24V

TORCH SPIKE-3W

CODE	SIZE	CRI	BEAM ANGLE	IP CODE	CCT	BODY COLOUR	VOLTAGE
CTR-TS3	86×22MM	>90RA	15°	IP67	3K	BLACK	DC 24V

Torch Series



TORCH 1WAY



ANTI-GLARE

DIMMABLE

TUNEABLE

TORCH 2WAY



TORCH SPIKE

ANTI-GLARE

DIMMABLE

TUNEABLE



Dew
5W



DEW 5W

CODE	SIZE	CUT OUT	BEAM ANGLE	IP CODE	CCT	BODY COLOUR
CTR-DE5-001	22x60MM	15MM	24°	IP20	3K/4K/6K	WHITE
CTR-DE5-002	22x60MM	15MM	24°	IP20	3K/4K/6K	BLACK
CTR-DE5-003	22x60MM	15MM	24°	IP20	3K/4K/6K	GOLD
CTR-DE5-004	22x60MM	15MM	24°	IP20	3K/4K/6K	METALLIC BLACK



Pencil
2W

ANTI-GLARE
DIMMABLE
TUNEABLE

PENCIL 2W

CODE	CTR-P2
SIZE	13x55MM
CUT OUT	13MM
BEAM ANGLE	3°
IP CODE	IP20
CCT	3K
BODY COLOUR	BLACK
REFLECTOR COLOUR	GOLD

ANTI-GLARE

DIMMABLE

TUNEABLE

Drop
1W



DROP 1W

CODE	CTR-DR1
SIZE	20×22MM
CUT OUT	15MM
BEAM ANGLE	14°
IP CODE	IP65
CCT	3K
BODY COLOUR	BLACK
VOLTAGE	DC 24V

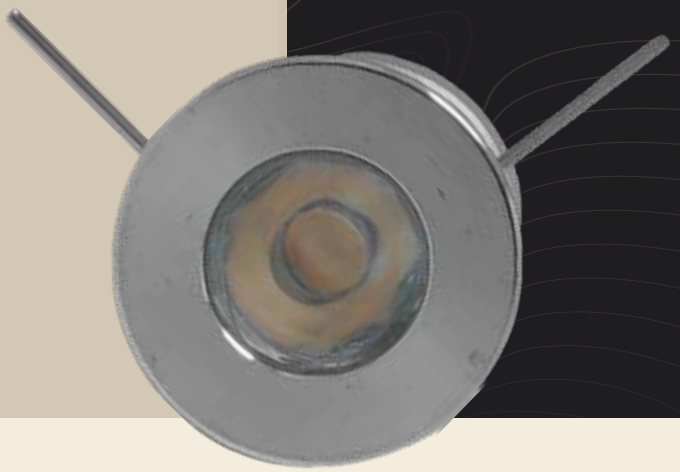

Mint
1W

ANTI-GLARE

DIMMABLE

TUNEABLE

MINT 1W

CODE	CTR-MI2
SIZE	24×35.5MM
CRI	>80 RA
BEAM ANGLE	15°
IP CODE	IP67
CCT	3K
VOLTAGE	DC 24V

CARAT 3W

CODE	CTR-CA3
SIZE	35×48MM
CRI	>80 RA
BEAM ANGLE	45°
IP CODE	IP67
CCT	3K
VOLTAGE	DC 24V



Carat
3W

Eye
3W

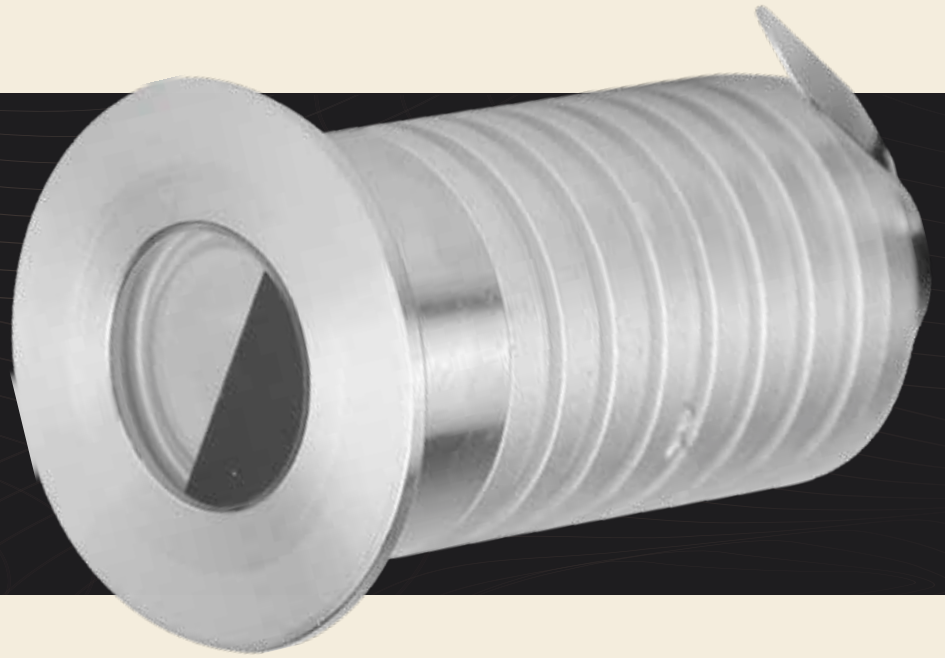

ANTI-GLARE

DIMMABLE

TUNEABLE

EYE 3W

CODE	CTR-EY3
SIZE	35×48MM
CRI	>80 RA
BEAM ANGLE	45°
IP CODE	IP67
CCT	3K
VOLTAGE	DC 24V

ANTI-GLARE

DIMMABLE

TUNEABLE

Aura
3W



AURA 3W

CODE	CTR-AU3
SIZE	48×44MM
CRI	>80 RA
BEAM ANGLE	30°
IP CODE	IP67
CCT	3K
VOLTAGE	DC 24V

AURA 6W

CODE	CTR-AU6
SIZE	Φ60MM
CRI	>80 RA
BEAM ANGLE	30°
IP CODE	IP67
CCT	3K
VOLTAGE	DC 24V



Aura
6W

ANTI-GLARE

DIMMABLE

TUNEABLE

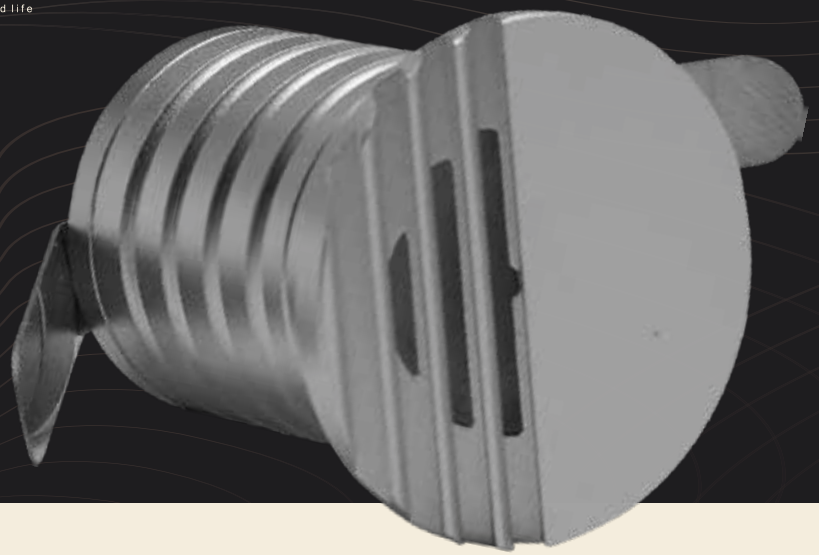

Step
1W

ANTI-GLARE

DIMMABLE

TUNEABLE

STEP 1W

CODE	CTR-ST1
SIZE	35×36MM
CRI	>80 RA
BEAM ANGLE	15°
IP CODE	IP67
CCT	3K
VOLTAGE	DC 24V

RING 1W

CODE	CTR-RI1
SIZE	42×30MM
CRI	>80 RA
BEAM ANGLE	180°
IP CODE	IP67
CCT	3K
VOLTAGE	DC 24V

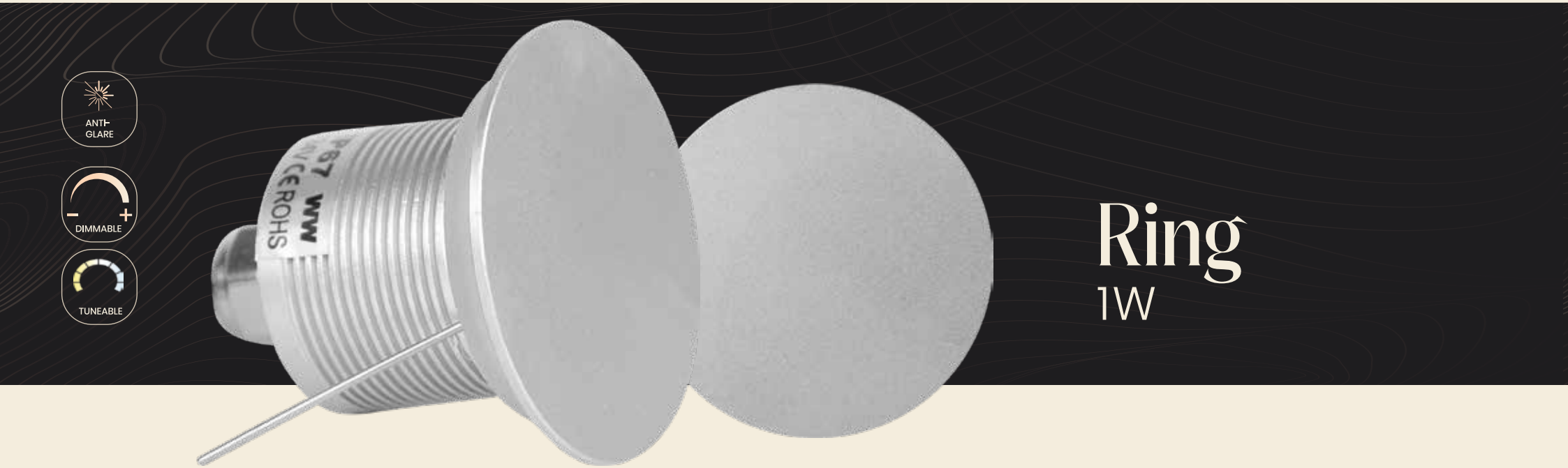

OVAL 3W

CODE	CTR-OV3
SIZE	50×48MM
CRI	>80 RA
BEAM ANGLE	45°
IP CODE	IP67
CCT	3K
VOLTAGE	DC 24V

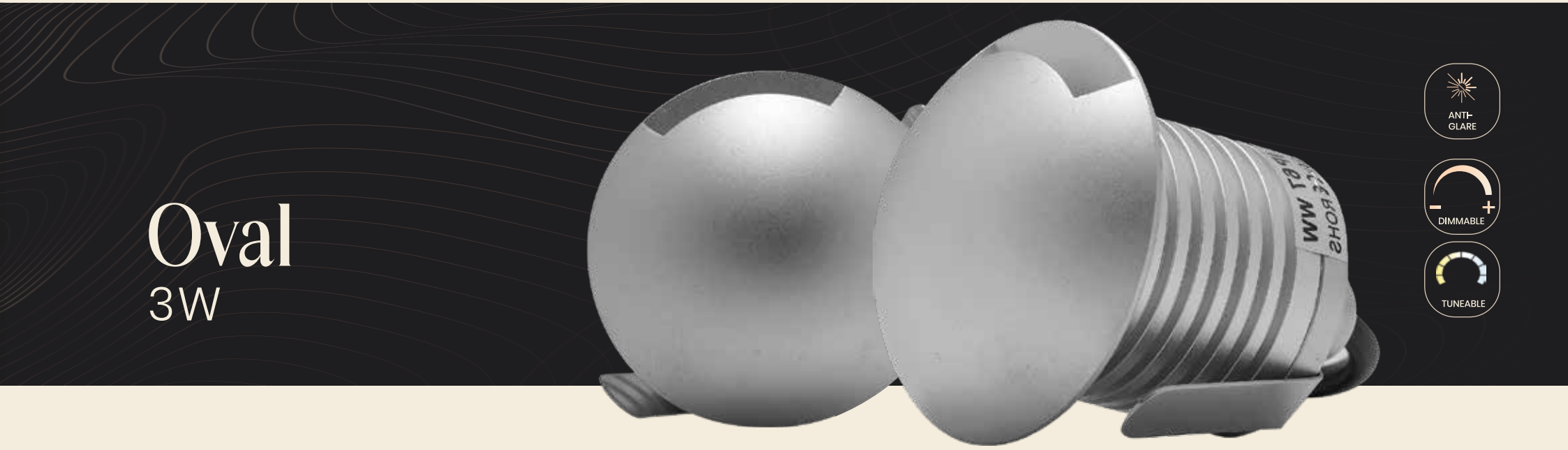

ANTI-GLARE

DIMMABLE

TUNEABLE

Orbit
3W

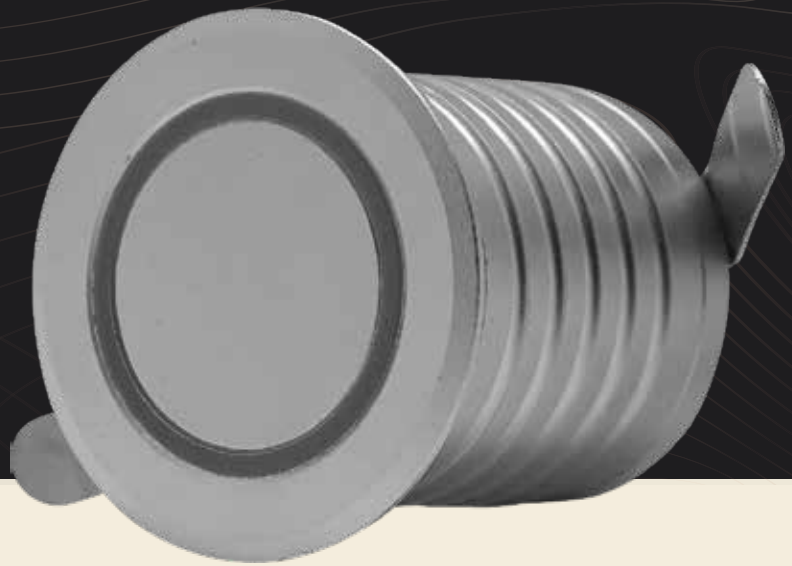

ORBIT 3W

CODE	CTR-OR3
SIZE	42×42MM
CRI	>80 RA
IP CODE	IP67
CCT	3K
VOLTAGE	DC 24V

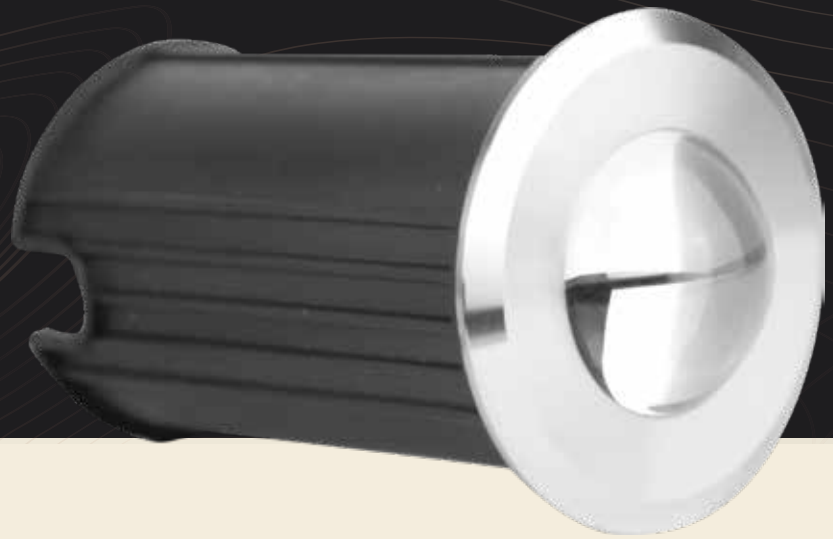

Bolt
3W

ANTI-GLARE

DIMMABLE

TUNEABLE

BOLT 3W

CODE	CTR-BO3
SIZE	62×90MM
CRI	>80 RA
BEAM ANGLE	45°
IP CODE	IP67
CCT	3K
VOLTAGE	DC 24V

ANTI-GLARE

DIMMABLE

TUNEABLE

Piston
7W



PISTON 7W

CODE	CTR-P7-001
SIZE	Ø130XH140MM
CRI	>80 RA
BEAM ANGLE	45°
IP CODE	IP67
CCT	3K
VOLTAGE	DC 24V

RIBBON

CODE	CTR-RB5-001	CTR-RB5-002	CTR-RB15-001	CTR-RB15-002
POWER	5W/MTR	5W/MTR	15W/MTR	15W/MTR
WIDTH	2.5MM	5MM	8MM	8MM
LENGTH	5 MTR	5 MTR	5 MTR	5 MTR
IP CODE	IP20	IP67	IP67	IP67
CCT	3K/4K/6K	3K/4K/6K	3K/4K/6K	BLUE/PINK/PURPLE/AMBER
VOLTAGE	DC 12V	DC 24V	DC 24V	DC 24V





RIBBON

CODE	CTR-RB12-TN-001	CTR-RB15-MC-001	CTR-RB35-TN-MC-001
POWER	12+12W/MTR	15W/MTR	35W/MTR
WIDTH	8MM	10MM	12MM
LENGTH	5 MTR	5 MTR	5 MTR
IP CODE	IP67	IP67	IP67
CCT	CCT	RGB	RGB+CCT
VOLTAGE	DC 24V	DC 24V	DC 24V

A smart lighting solution

We offer a revolutionary smart lighting solution for the modern world. Enhance your ambience with precision control, energy efficiency, and convenience like never before.



Wall Washer
36W



ANTI-GLARE

DIMMABLE

TUNEABLE

WALL WASHER 36W

CODE	CTR-AW36
SIZE	32×48MM
CRI	>80 RA
BEAM ANGLE	10°
IP CODE	IP65
CCT	3K
LENGTH	1 MTR
VOLTAGE	DC 24V



Flexible wall washer

15W

CODE	CTR-FW15
SIZE	40×34MM
CRI	>80 RA
BEAM ANGLE	10°
IP CODE	IP65
CCT	3K
LENGTH	1 MTR
VOLTAGE	DC 24V

Wall Grazer
15W

WALL GRAZER 15W

CODE	CTR-WG15
SIZE	23×14MM
BEAM ANGLE	10°
IP CODE	IP65
CCT	3K
LENGTH	1 MTR
VOLTAGE	DC 24V

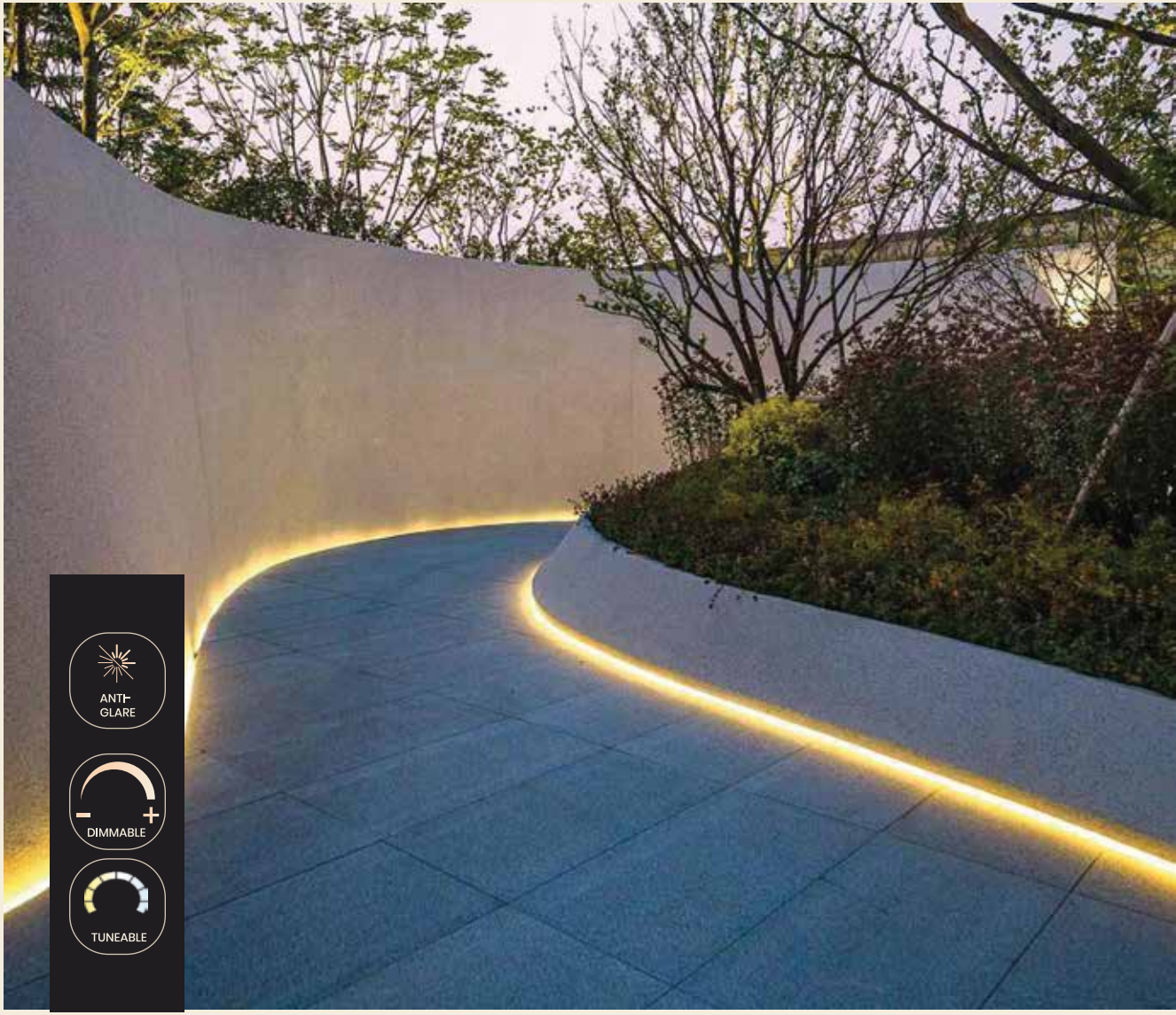

ANTI-GLARE

DIMMABLE

TUNEABLE



Belt
24W/MTR

BELT 24W/MTR

CODE	**CTR-BL24-001**
POWER	24W/MTR
SIZE	24X6.5
BEAM ANGLE	15°
ROLL	5 MTR
IP CODE	IP65
CCT	2700K
VOLTAGE	DC 24V

Curtain Grazer
30W/MTR

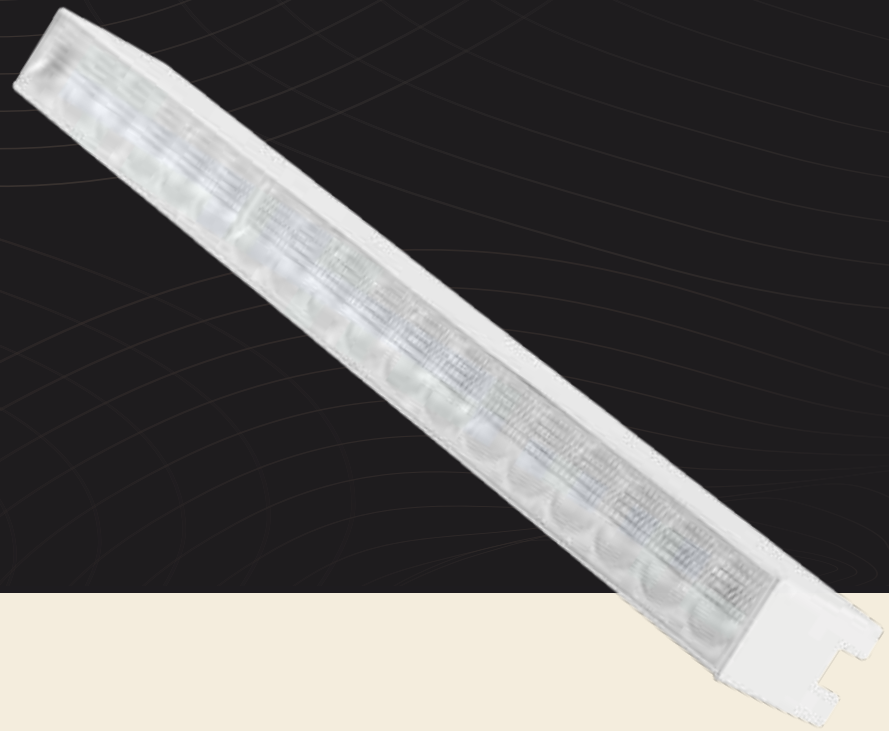

ANTI-GLARE

DIMMABLE

TUNEABLE

CURTAIN GRAZER 30W/MTR

CODE	SIZE	CRI	BEAM ANGLE	IP CODE	CCT	LENGTH	VOLTAGE
CTR-CG30-001	22X30MM	>90 RA	10°	IP44	3K	1 MTR	DC 24V



NOTES

NOTES

CATERLUX

Live an illuminated life

info@caterlux.co.in
www.caterlux.co.in